FailSafe Document

SAIC

EBC460 VSC

Version 1.0
2013-09-24

PROPRIETARY NOTICE: This document is copyright and the property of TRW Automotive Inc. It is disclosed in confidence. It may not be copied (in whole or in part), disclosed to others or used for manufacturing, without the prior written consent of TRW Automotive Inc.
© TRW Automotive Inc. 2006

Revision Log

Version	Date (dd-mm-yyyy)	Section Affected	Changes	By
1.1	24-09-2013			Changlin He
1.2	08-11-2013	5.6 ECU Faults	Customer fault codes have been updated as per the latest DTC assignment guideline.	Sreenivasulu V
1.3	05-12-2013	5.19 Invalid Data on the CAN bus Faults	Updated the descrition of comms sas voltage error fault	Sreenivasulu V
1.4	05-12-2013	5.2 Valve solenoid faults	Added the fault Missing fly back diode	Sreenivasulu V

PROPRIETARY NOTICE: This document is copyright and the property of TRW Automotive Inc. It is disclosed in confidence. It may not be copied (in whole or in part), disclosed to others or used for manufacturing, without the prior written consent of TRW Automotive Inc.
© TRW Automotive Inc. 2006

Contents

1 INTRODUCTION 9

1.1 REFERENCES 9

2 FAILSAFE OVERVIEW 10

3 DIAGNOSTIC FEATURES PROVIDED 11

3.1 INFORMATION AVAILABLE FROM ECU 11
3.2 ELECTRONIC COMMUNICATIONS 11

4 INFORMATION CONTAINED IN THE FAILSAFE DESCRIPTION 12

4.1 DTC CODE 12
4.2 FAULT SYMPTOM 12
4.3 CONDITION FOR RECOGNITION 12
4.4 REASON FOR FAULT 13
4.5 DETECTION RULES 13
4.6 DETECTION TIME 13
4.7 LATCH TYPE 14
4.8 SYSTEM RESPONSE 15
4.9 DRIVER NOTIFICATION AND ECE 16

5 FAILSAFE DESCRIPTION 17

5.1 WHEEL SPEED SENSOR FAULTS 17
5.1.1 Wheel Speed Sensor Ohmic Open Failure 18
5.1.2 Wheel Speed Sensor Ohmic Short Failure 20
5.1.3 Wheel Speed Sensor High side overcurrent Failures: 22
5.1.4 Wheel Speed Sensor Ohmic Short to SUPPLY Failures : 24
5.1.5 Wheel Speed Sensor Missing 26
5.1.6 Wheel Speed Sensor Fast Missing 28

PROPRIETARY NOTICE: This document is copyright and the property of TRW Automotive Inc. It is disclosed in confidence. It may not be copied (in whole or in part), disclosed to others or used for manufacturing, without the prior written consent of TRW Automotive Inc.
© TRW Automotive Inc. 2006

5.1.7 Wheel Speed Sensor Too Fast Missing 30
5.1.8 Wheel Speed Sensor Erratic 32
5.1.9 Wheel speed Sensor Dropout 34
5.1.10 Wheel Speed Sensor Shadow Zone Failure 38
5.1.11 Mismatched Tire 40
5.1.12 Wheel Speed Sensor TYPE Mismatch 41
5.1.13 Both wheel speed sensors on the rear axle failed 43
5.1.14 Both wheel speed sensors on the front axle failed 44
5.1.15 Multiple wheel speed failures have occurred 45
5.2 VALVE SOLENOID FAULTS 46
5.2.1 Open solenoid 47
5.2.2 Shorted Solenoid Driver 52
5.2.3 Leaky Driver Fault 54
5.2.4 Shorted solenoid 56
5.2.5 Solenoid Overtemperature 61
5.2.6 Leaky Driver of Unknown Coil (Only use for ESC) 67
5.2.7 Missing fly back diode (Only use for ESC) 68
5.2.8 Loss Of Solenoid Ground In The Wiring Harness 69
5.3 PUMP MOTOR FAULTS 70
5.3.1 ABS Open Pump Motor 70
5.3.2 ABS Pump Motor Driver Open 71
5.3.3 ABS Pump Motor Supply Open 72
5.3.4 ABS Locked Pump Motor 73
5.4 MICROCONTROLLER FAULTS 74
5.4.1 LOGICAL_SEQUENCE_FAULT_R4 (Only use for ESC) 74
5.4.2 LOGICAL_SEQUENCE_FAULT_M3 (Only use for ESC) 75
5.4.3 LBIST (CPU) Fault R4 (Only use for ESC) 76
5.4.4 LBIST (CPU) Fault M3 77
5.4.5 Mismatch MISR R4 Fault (Only use for ESC) 78
5.4.6 Mismatch MISR M3 Fault (Only use for ESC) 79
5.4.7 Dual Clock Compare Fault (Only use for ESC) 80
5.4.8 IMM Fault R4 (Only use for ESC) 81
5.4.9 IMM Fault M3 (Only use for ESC) 82
5.4.10 Lockup M3 Fault (Only use for ESC) 83
5.4.11 Imprecise Abort M3 Fault 84
5.4.12 Rom Check R4 Fault (Only use for ESC) 85
5.4.13 Rom Check M3 Fault 86
5.4.14 CRC Rom Check R4 Fault (Only use for ESC) 87
5.4.15 CRC Rom Check M3 Fault 88
5.4.16 Dynamic RAM Check Failure R4 Fault 89
5.4.17 R4 RAM Check Fault (Only use for ESC) 90

PROPRIETARY NOTICE: This document is copyright and the property of TRW Automotive Inc. It is disclosed in confidence. It may not be copied (in whole or in part), disclosed to others or used for manufacturing, without the prior written consent of TRW Automotive Inc.
© TRW Automotive Inc. 2006

5.4.18 M3 RAM Check Fault 91
5.4.19 RAM ECC Check Failure_M3 Fault 92
5.4.20 DMA Failure Fault ESC (Only use for ESC) 93
5.4.21 RAM corrupts associated with the state variables_R4 (Only use for ESC) 94
5.4.22 RAM corrupts associated with the state variables_M3 95
5.4.23 HET1_RAM Check Fault 96
5.4.24 HET2_RAM Check Fault 97
5.4.25 RAM Check Failure_R4 98
5.4.26 HET1 Parity Check Failure 99
5.4.27 Cpu Mode Stack Fault R4 Fault (Only use for ESC) 100
5.4.28 Cpu Mode Stack Fault M3 Fault 101
5.4.29 Task Stack Fault R4 (Only use for ESC) 102
5.4.30 Task Stack Fault M3 103
5.4.31 Task Overrun Failure R4 (Only use for ESC) 104
5.4.32 Task Overrun Failure M3 105
5.4.33 External Watchdog Failure 106
5.4.34 External Secondary Shutoff Path Failure (WDEN pin) (Only use for ESC) 107
5.4.35 Watchdog Dynamic Test Failure 108
5.4.36 AD Peripheral Timeout Failure 109
5.4.37 Lockup of ADC Event Group (Only use for ESC) 110
5.4.38 MIRAM AD Refresh Fault 111
5.4.39 MIRAM DIAG Register Fault (Only use for ESC) 112
5.4.40 RTOS Failure R4 Failure (Only use for ESC) 113
5.4.41 RTOS Failure M3 Failure 114
5.4.42 Unimplemented Interrupt R4 (Only use for ESC) 115
5.4.43 Unimplemented Interrupt M3 116
5.4.44 Unexpected Exception R4 (Only use for ESC) 117
5.4.45 Unexpected Exception M3 118
5.4.46 Solenoid Timeout Failure 119
5.4.47 Het1 faulty_Interrupt functionality Failure (Only use for ESC) 120
5.4.48 Het2 faulty_Interrupt functionality Failure (Only use for ESC) 121
5.4.49 Het 2 Periodic Interrupt Failure (Only use for ESC) 122
5.4.50 Het 1 Periodic Interrupt Failure 123
5.4.51 Het1_Watchdog Timeout (Only use for ESC) 124
5.4.52 Het2_Watchdog Timeout 125
5.4.53 Het 2 Program Error 126
5.4.54 Het1 Program Overflow (Only use for ESC) 127
5.4.55 Het2_Program Overflow 128
5.4.56 Het1 control_Register failure (Only use for ESC) 129
5.4.57 Het2 control_Register failure 130
5.4.58 Failsafe Micro M3 Calculate Different Velocity 131

PROPRIETARY NOTICE: This document is copyright and the property of TRW Automotive Inc. It is disclosed in confidence. It may not be copied (in whole or in part), disclosed to others or used for manufacturing, without the prior written consent of TRW Automotive Inc.
© TRW Automotive Inc. 2006

5.4.59 Failsafe Micro M3 communication failure M3 (Only use for ESC) 132
5.4.60 Failsafe micro M3 failure R4(Only use for ESC) 133
5.4.61 FM communication failure M3 (Only use for ESC) 134
5.4.62 FM communication failure R4 (Only use for ESC) 135
5.4.63 ICC TIMEOUT R4 (Only use for ESC) 136
5.4.64 ICC TIMEOUT Fault M3 (Only use for ESC) 137
5.5 POWER SUPPLY FAULTS 138
5.5.1 System Voltage Low 138
5.5.2 System Voltage Excessive Low 139
5.5.3 System Voltage High 140
5.5.4 System Voltage Excessively High 141
5.5.5 System Voltage Erratic (Only use for ESC) 142
5.6 ECU FAULTS 143
5.6.1 Internal 5 V Sensor Supply failure 143
5.6.2 Internal 5 V Sensor Supply Erratic 144
5.6.3 SPI Failure 145
5.6.4 NVRAM Chip not operational 146
5.6.5 NVRAM Chip INFORMATION FAILURE 147
5.6.6 NVRAM Reset Ongoing 148
5.6.7 Acceleration Sensor SPI not operational (Only use for ESC) 149
5.7 POWER RELAY FAULTS 150
5.7.1 Open power switch for slip control 150
5.7.2 Shorted power switch for slip control 151
5.8 STEERING ANGLE SENSOR FAULTS 152
5.8.1 Steering wheel angle offset error 152
5.8.2 Steering wheel angle raw offset error 153
5.8.3 Steering wheel angle range error 154
5.8.4 Steering wheel not alive error 155
5.8.5 Steering wheel angle sensor gain error: 156
5.8.6 Steering wheel angle step error 158
5.9 YAW SENSOR FAULTS 159
5.9.1 YAW Sensor Shorted High Failure (Only use for ESC) 159
5.9.2 YAW Sensor Open Or Short To Ground Failure (Only use for ESC) 160
5.9.3 YAW Sensor Temperature Range 161
5.9.4 YAW Sensor Erratic Failure (Only use for ESC) 162
5.9.5 YAW Sensor Raw Offest Failure (Only use for ESC) 163
5.9.6 YAW Sensor Offest Failure (Only use for ESC) 164
5.9.7 YAW Sensor Gain Error (Only use for ESC) 166
5.9.8 YAW Sensor Not Alive Error (Only use for ESC) 168
5.9.9 Yaw Sensor Diag state (Only use for ESC) 169
5.9.10 Yaw Sensor Ground loss (Only use for ESC) 170

PROPRIETARY NOTICE: This document is copyright and the property of TRW Automotive Inc. It is disclosed in confidence. It may not be copied (in whole or in part), disclosed to others or used for manufacturing, without the prior written consent of TRW Automotive Inc.
© TRW Automotive Inc. 2006

5.9.11 Angular Rate Sensor Built-in Test Failure-YAW RATE TEST FAIL(Only use for ESC) ... 171
5.9.12 Angular Rate Sensor Configuration Failure (Only use for ESC) ... 172
5.9.13 Excessive YSC control Error ... 173
5.10 LATERAL SENSOR FAULTS ... 174
5.10.1 Lateral Sensor Out Of Range (Only use for ESC) ... 174
5.10.2 Lateral Acceleration Sensor Offest Failure (Only use for ESC) ... 175
5.10.3 Lateral Acceleration Sensor Raw Offest Failure (Only use for ESC) ... 177
5.10.4 Lateral Acceleration Sensor Gain Error (Only use for ESC) ... 178
5.10.5 Accel Sensor Id 0 - Temperature Range ... 179
5.10.6 Lateral sensor not alive error (Only use for ESC) ... 180
5.11 ACCEL DEVICE FAULTS ... 181
5.11.1 Inertial sensor_initialisation fault ... 181
5.11.2 Inertial Sensors Missing Calibration ... 182
5.11.3 Acceleration Sensor Diag status Test Failure (Only use for ESC) ... 183
5.11.4 Acceleration Sensor Power On Reset (Only use for ESC) ... 184
5.11.5 Acceleration Sensor_is saturated (Only use for ESC) ... 185
5.11.6 Accel Sensor Configuration Failure (Only use for ESC) ... 186
5.12 LONG SENSOR FAULTS ... 187
5.12.1 Longitudinal Sensor Out Of Range ... 187
5.12.2 Longitudinal Acceleration Sensor Offset Failure ... 188
5.12.3 Longitudinal Acceleration Sensor Raw Offest Failure ... 189
5.12.4 Longitudinal Acceleration Sensor Gain Error ... 190
5.12.5 Long Acceleration Sensor – Not Alive Error ... 191
5.13 PRESSURE SENSOR FAULTS ... 192
5.13.1 MC Pressure Sensor open or_Shorted High ... 192
5.13.2 MC Pressure Sensor Ohmic Shorted Low ... 193
5.13.3 MC Pressure Sensor Correlation Failure ... 194
5.13.4 MC Pressure Sensor Erratic ... 195
5.13.5 Pressure Sensor Offset Error ... 196
5.13.6 Pressure Sensor Raw Offset Error ... 197
5.13.7 Pressure Sensor Not Alive Error ... 198
5.14 CHASSINF RELATED FAULTS ... 199
5.14.1 Chassinf configuration fault ... 199
5.14.2 Car Configuration Mismatch ... 200
5.14.3 Performance disabled option_All ... 201
5.14.4 Performance disabled option1 ... 202
5.14.5 Performance disabled option2 ... 203
5.14.6 Performance disabled option3 ... 204
5.14.7 TCBI disabled by adaption ... 205
5.14.8 ECD disabled by adaption ... 206
5.15 MISC FAULTS ... 207

PROPRIETARY NOTICE: This document is copyright and the property of TRW Automotive Inc. It is disclosed in confidence. It may not be copied (in whole or in part), disclosed to others or used for manufacturing, without the prior written consent of TRW Automotive Inc.
© TRW Automotive Inc. 2006

5.15.1 Wheel Speed Output Overcurrent Failure CHANNEL1 207
5.15.2 Wheel Speed Output Overcurrent Failure CHANNEL 2 208
5.15.3 System in KeepAlive 209
5.15.4 Controlled System Shutdown Failure 210
5.15.5 Erroneous Valve Supply Voltage 211
5.15.6 INVALID_STATE_R4(For Debug Only in ESC) 212
5.15.7 INVALID_STATE_M3(For Debug Only) 213
5.15.8 DIVIDE_BY_ZERO_FAULT_R4 (For Debug Only in ESC) 214
5.15.9 DIVIDE_BY_ZERO_FAULT_M3 (For Debug Only) 215
5.15.10 M3_MISSING_FAULT 216
5.16 SWITCH FAULTS 217
5.16.1 Brake Switch Always Active 217
5.16.2 Brake Switch Never Active 217
5.16.3 Driver Mode Switch Stuck ON (only for ESC) : 219
5.16.4 Driver Mode Switch Invalid (only for ESC) : 220
5.16.5 Reverse Switch Correlation Failure 221
5.16.6 Clutch Switch Correlation Failure: 222
5.17 CAN COMMUNICATION FAULTS 223
5.17.1 CAN Bus 0 Off 223
5.17.2 CAN Bus 0 Hardware INIT 224
5.17.3 CAN Bus 0 Mute / CAN Bus 0 Transmission Acknowledge 225
5.18 MESSEGE TIMEOUT FAILURES 226
5.18.1 BCM HSC FRP00 CAN message timeout failure 226
5.18.2 BCM HSC FRP02 CAN message timeout failure 227
5.18.3 BCM HSC FRP03 CAN message timeout failure 227
5.18.4 EMS HSC FRP00 CAN message timeout failure 228
5.18.5 EMS HSC FRP01 CAN message timeout failure 230
5.18.6 EMS HSC Fr P02 CAN message timeout failure 231
5.18.7 EMS HSC Fr P03 CAN message timeout failure 232
5.18.8 EMS HSC Fr P05 CAN message timeout failure 233
5.18.9 AMT HSC Fr P01 CAN message timeout failure 234
5.18.10 IMU HSC Fr P00 CAN message timeout failure 235
5.18.11 IMU HSC Fr P01 CAN message timeout failure 236
5.18.12 IPK HSC Fr P00 CAN message timeout failure 237
5.18.13 IPK HSC Fr P01 CAN message timeout failure 238
5.18.14 IPK HSC Fr P05 CAN message timeout failure 239
5.18.15 SAS HSC Fr P00 CAN message timeout failure 240
5.18.16 TCU HSC Fr P00 CAN message timeout failure 241
5.19 INVALID DATA ON THE CAN BUS FAULTS 242
5.19.1 Invalid Engine speed received on CAN 242
5.19.2 Invalid Engine Torque received on CAN 243

PROPRIETARY NOTICE: This document is copyright and the property of TRW Automotive Inc. It is disclosed in confidence. It may not be copied (in whole or in part), disclosed to others or used for manufacturing, without the prior written consent of TRW Automotive Inc.
© TRW Automotive Inc. 2006

5.19.3 Invalid accel pedal postion received on CAN 244
5.19.4 Invalid actual gear postion received on CAN 245
5.19.5 Invalid target gear postion received on CAN 246
5.19.6 Invalid engine coolant temperature received on CAN 247
5.19.7 Sas voltage error 248
5.19.8 Invalid steering Angle received on CAN 249
5.19.9 SAS not Calibrated 250
5.19.10 Invalid SAS alive counter 251
5.19.11 Invalid Yaw rate data 252
5.19.12 Invalid SAS checksum 253
5.19.13 Invalid Long accel data 254
5.19.14 Invalid Lat accel data 255
5.19.15 Invalid IMU Yaw message alive counter 256
5.19.16 Invalid IMU Long message alive counter 257
5.20 EHB FAILURES (APPLICABLE FOR ONLY ESC) 258
5.20.1 BHM-APC learned offset value is excessive out of range (only for ESC) 258
5.20.2 BHM-APC has detected a defect pump, TC-Iso or TC-Supply (only for ESC) 259
5.20.3 Exc. No. of failed learning attempts by too less rpm of pump (only for ESC) 260
5.20.4 Exc. No. of failed learning attempts by input signal quality (only for ESC) 261

PROPRIETARY NOTICE: This document is copyright and the property of TRW Automotive Inc. It is disclosed in confidence. It may not be copied (in whole or in part), disclosed to others or used for manufacturing, without the prior written consent of TRW Automotive Inc.
© TRW Automotive Inc. 2006

1 INTRODUCTION

As in previous generations of braking systems, this system has a wide range of failsafe and diagnostic capabilities. These capabilities are described in this document. The goal of the failsafe and diagnostic capabilities is system integrity and end user satisfaction. In order to achieve the goal, fault detection and diagnostic features have been provided that function:

1. During system manufacture before shipment to the vehicle assembly plant.
2. In the vehicle assembly plant after installation in the vehicle.
3. During vehicle operation after leaving the assembly plant.
4. During vehicle service procedures.
5. During system rebuild after removal from the vehicle and shipment to a service center.

1.1 References

The following documents contain information that is relevant to this failsafe document.

Reference no.	Document number	Title
[1]	ISO 15031-6	Road vehicles - Communication between vehicle and external test equipment for emissions-related diagnostics – Part 6: Diagnostic trouble code definitions
[2]	Regulation No. 13 Rev. 5	United Nations Economics Commission for Europe – UNIFORM PROVISIONS CONCERNING THE APPROVAL OF VEHICLES OF CATEGORIES M, N, AND O WITH REGARD TO BRAKING – TEST REQUIREMENTS FOR VEHICLES FITTED WITH ANTI-LOCK SYSTEMS
[3]	N/A	*Brake Decel Controller* from Volvo Car Corporation

PROPRIETARY NOTICE: This document is copyright and the property of TRW Automotive Inc. It is disclosed in confidence. It may not be copied (in whole or in part), disclosed to others or used for manufacturing, without the prior written consent of TRW Automotive Inc.
© TRW Automotive Inc. 2006

2 FAILSAFE OVERVIEW

The system monitors components for potential fault symptoms and initiates appropriate system responses if one or more faults are detected. Since the fault monitoring logic is handled by the ECU, detectable system faults must take the form of electrical inputs to the microcontroller in the ECU. This includes potential faults within the ECU itself. Response to a detected problem is generally to modify the system behavior and possibly return the vehicle to conventional braking. For systems that include EBD, the EBD functionality is maintained as long as possible.

A diagnostic trouble code (DTC) has been assigned to each type of fault that can be detected by the microcontroller. In this project a group of faults are mapped to one DTC.
E.g. all solenoid faults as well many other faults are mapped to an ECU defective DTC.

The ECU has the capability of detecting multiple faults. In most cases, several possible problems appear electrically identical to the microcontroller. For example, a wire cut in two, grounded to chassis by a pinch through its insulation, or shorted to system ground by a solder bridge within the ECU may appear identical to the microcontroller. Although these ambiguities may occasionally complicate trouble-shooting, they imply even more comprehensive fault detection than may appear at first glance at the fault detection list. The description of each type of system fault includes both, the most probable or nominal cause as well as other foreseeable possibilities.

Fault detection is usually performed by passively monitoring various system components during an ignition cycle. Some components are monitored for certain fault symptoms only at the beginning of an ignition cycle. These particular component fail-safes are performed at the beginning of the ignition cycle so potential problems can be detected soon enough to be a real benefit. Also, certain fault symptoms can only be detected at the beginning of the ignition cycle. Otherwise they can not be detected at all.

These component fail-safes include:

1. Microcontroller RAM and ROM self-test.
2. Components failsafed by the System Self-Test (see the SYSTEM SELF-TEST section).

PROPRIETARY NOTICE: This document is copyright and the property of TRW Automotive Inc. It is disclosed in confidence. It may not be copied (in whole or in part), disclosed to others or used for manufacturing, without the prior written consent of TRW Automotive Inc.
© TRW Automotive Inc. 2006

3 DIAGNOSTIC FEATURES PROVIDED

Diagnostic features in this system involve communication with the ECU by the use of various test and manufacturing tools. Output from the ECU provides information stored in volatile and non-volatile memory. Input to the ECU provides the ability to execute various requests, tests, and commands.

Even when control activity is inhibited and the indicator lamp is on, the microcontroller continues to execute the portions of the software required to communicate with test tools and detect any additional faults.

These diagnostic capabilities can be used to perform:

1. End-of-line testing and checkout at EHCU manufacturing facilities.
2. Service diagnostics at vehicle dealerships or other authorized vehicle service facilities.
3. Repair diagnostics at authorized EHCU rebuild facilities.

3.1 Information Available From ECU

The diagnostic trouble codes identify current and/or past errors that have been detected by failsafe logic in the ECU microcontroller. Fault detection is detailed later in the document by describing each problem in detail.

When a system fault occurs, the diagnostic trouble code and its environmental data are written to non-volatile memory. This ensures that a record of the fault is available for a service technician. Diagnostic trouble codes written into non-volatile memory remain available until the codes are explicitly reset by a service tool, or a predefined number of ignition cycles have been completed without a detected failure.

3.2 Electronic Communications

Electronic communication to and from the system occur serially. The communication protocol used is defined by the OEM for the particular application.

PROPRIETARY NOTICE: This document is copyright and the property of TRW Automotive Inc. It is disclosed in confidence. It may not be copied (in whole or in part), disclosed to others or used for manufacturing, without the prior written consent of TRW Automotive Inc.
© TRW Automotive Inc. 2006

4 INFORMATION CONTAINED IN THE FAILSAFE DESCRIPTION

Each fault that the system could detect is described in this failsafe manual in a consistent manner, as described in the following section.

4.1 DTC Code

The system component being failsafed and the DTC assigned to the particular unique component/fault symptom being failsafed.
The given DTC codes are provided by a customer document 20110411-EEI3-SMTC ComponentDiagnostic Specification_ZP11_CustomerDTCList

4.2 Fault Symptom

The fault symptom is an additional information to the DTC. It's also known as failure type byte and describes the category of the failure.
The symptom can describe e.g. a wiring fault (circuit open or short) or a signal fault (plausibility failure) as well.
All in this document used fault symptoms are based on ISO 15031-6 annex D (reference [1]).

4.3 Condition For Recognition

System conditions, which must be present in order to run the fail-safe. Also, the number of times the failsafe is run during an ignition cycle.

The following symbols describes under which environmental condition faults are detected resp. the monitor routine is running or not.
In general all faults could be detected under "normal" operating mode. This means that the ignition is switch on and the system voltage is in a valid range.
Beside the normal operating mode five different operating conditions could occur:

1. System voltage excessive low (< 7.5 Volts)
2. System voltage low (< 8.5 Volts)
3. System voltage high (> 16.5 Volts)
4. System voltage excessive high (> 18.5 Volts)

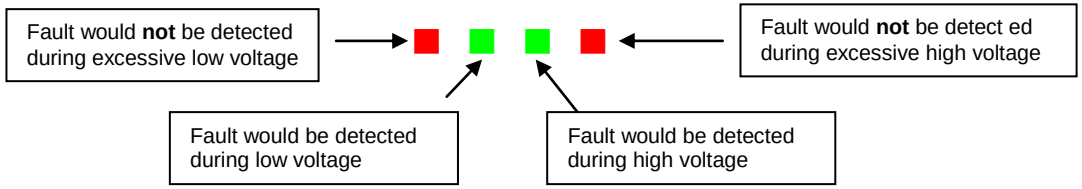

PROPRIETARY NOTICE: This document is copyright and the property of TRW Automotive Inc. It is disclosed in confidence. It may not be copied (in whole or in part), disclosed to others or used for manufacturing, without the prior written consent of TRW Automotive Inc.
© TRW Automotive Inc. 2006

4.4 Reason For Fault

A list of possible reasons why a component is currently exhibiting a particular fault symptom.

4.5 Detection Rules

Rules used to identify a component as currently exhibiting a particular fault symptom.

4.6 Detection Time

The time between the first (unfiltered) fault detection and certain (filtered) fault detection.
The filter time is to reduce signal noises.

PROPRIETARY NOTICE: This document is copyright and the property of TRW Automotive Inc. It is disclosed in confidence. It may not be copied (in whole or in part), disclosed to others or used for manufacturing, without the prior written consent of TRW Automotive Inc.
© TRW Automotive Inc. 2006

4.7 Latch Type

Below are the classes the faults are divided into:

1. *Ignition Latched Fault*
   The consequences of the fault (e.g. lamps on, reduced system reaction) will remain until the ignition is turned off even if the cause of the fault goes away. When the ignition is turned on again the system will not be disabled unless/until a subsequent fault is detected, unless specified to require validation that the fault is no longer present.

2. *Condition Latched Fault*
   The consequences of the fault (e.g. lamps turned on, system reaction) will remain only as long as the fault condition persists. Normal system operation resumes as soon as the fault condition is no longer present and no other faults exist.

Independent of the latch type the failure is stored to EEPROM if it is latched by the monitor routine.

PROPRIETARY NOTICE: This document is copyright and the property of TRW Automotive Inc. It is disclosed in confidence. It may not be copied (in whole or in part), disclosed to others or used for manufacturing, without the prior written consent of TRW Automotive Inc.
© TRW Automotive Inc. 2006

4.8 System Response

The System Response describes how each major subsystem (ABS, TC, etc.) will react if a fault occurs.
These responses include the following recovery levels:

R0	Recovery 0 – Normal control algorithm still active.
R1	Recovery 1 – Control algorithm still active with modified/reduced functionality.
R2	Recovery 2 – Control algorithm completely inhibited.

The reaction is based only on the fault in question being present in the system. The system reactions described in this failsafe manual are only valid while no performance systems are active. If any performance system is active when a fault occurs, the system response will occur if the performance system is no longer active (if the fault condition is still detected or latched).

If a failure occurs during performance system activity, it may be necessary to force a controlled return to base braking operation thus maintaining vehicle stability. The methods for returning the vehicle to base braking operation are not described in this manual.

If the system must be completely inhibited (inhibit all subsystems including EBD functionality) due to detected system fault(s), the following will occur:

1. Power relay, motor, and valve commands from the microcontroller are inhibited in order to return the vehicle to conventional braking.
2. Pulses from the microcontroller to the external watchdog are stopped. This redundantly inhibits relay, motor, and valve solenoid operation.
3. All ECU corresponding warning lamps will be requested by the BCM to illuminate. This notify the user/driver that the system is completely inhibited

PROPRIETARY NOTICE: This document is copyright and the property of TRW Automotive Inc. It is disclosed in confidence. It may not be copied (in whole or in part), disclosed to others or used for manufacturing, without the prior written consent of TRW Automotive Inc.
© TRW Automotive Inc. 2006

4.9 Driver Notification And ECE

Driver Notification describes what visual stimulus (warning lamps, displays etc.) will be activated to inform a driver that there is a system problem when a particular fault is detected.

The following warning lamps are available in ZP11 systems:

1.
The red warning lamp indicates EBD failures within the vehicle braking equipment as defined in paragraph 5.2.1.29.1.1 of ECE-Regulation No. 13 complaint to reference [2].

2.

The yellow warning lamp indicates an electrically detected defect within the vehicle braking equipment as defined in paragraph 5.2.1.29.1.2 of ECE-Regulation No. 13 complaint to reference [2].

3.
The separate yellow warning lamp indicates failures of special functions (e.g. TC, VSC).

In the following failsafe description, and its tables, are shown which of these warning lamps are requested by the BCM to illuminate in the dashboard if a corresponding fault occurs. Additionally a text message is shown in a dashboard display as well.

ECE is commonly referred to "prior fault validation". It describes how a fault is handled in a new ignition cycle if a fault is present when the ignition was turned off.

Upon power-up, the status of faults which are ECE compliant are checked to determine if the fault was present in the system when it was last shut down.
If any of these faults were present when the module was powered off, the System Responses and Driver Notifications will be the same as if the fault is currently being detected until it has been determined that the fault is no longer present.

Usually plausibility fault types (e.g. missing wheel speed sensor) are ECE compliant.

This fault handling scheme between ignition cycles allows compliance with government requirements as defined in Annex 13 paragraph 4.1.2 (reference [2])

PROPRIETARY NOTICE: This document is copyright and the property of TRW Automotive Inc. It is disclosed in confidence. It may not be copied (in whole or in part), disclosed to others or used for manufacturing, without the prior written consent of TRW Automotive Inc.
© TRW Automotive Inc. 2006

5 FAILSAFE DESCRIPTION

Each component/fault symptom that the system currently detects and fail-safes is described in the following sections.

5.1 Wheel Speed Sensor Faults

The EBC460 hardware supports four active wheel speed sensors.
The input signal of an active sensor is a rectangular signal with a variable pulse width and a variable DC offset.
These electrical inputs as well as the calculated wheel velocities are monitored continuously by the main micro and a second micro-controller.
The second micro controller is a redundant failsafe micro-controller to ensure that the main micro is working properly.
Only in case of excessive high voltage of the power supply the supervision is stopped and the sensor supply is switched off, to protect the wheel speed sensors against damage.

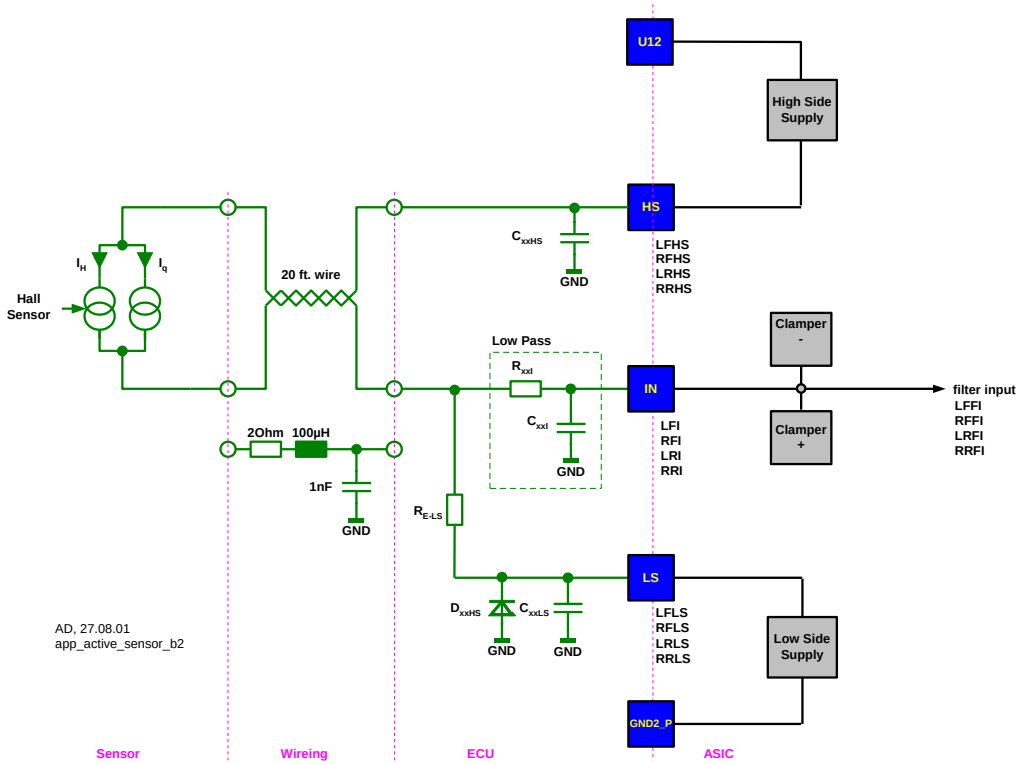

Figure: 1 Block Diagram of Active Sensor Mode

PROPRIETARY NOTICE: This document is copyright and the property of TRW Automotive Inc. It is disclosed in confidence. It may not be copied (in whole or in part), disclosed to others or used for manufacturing, without the prior written consent of TRW Automotive Inc.
© TRW Automotive Inc. 2006

5.1.1 Wheel Speed Sensor Ohmic Open Failure

DTC Code	Fault symptom	Condition for recog-nition	Reason for fault	Detection rules	Detection time	Latch type	System response	Driver notification -------- PFV (Yes/No)	Remarks
4032 [LF]	13	Power ON, Continuous Failsafing	***-Defective wire harness to wheel speed sensor or ECU*** ***-Defective wheel speed sensor*** ***-Defective printed circuit board*** ***-Defective mi-croprocessor***	**Open Wheel Speed Sensor** All Wheel Speed Sensors are checked periodically by the Miram ASIC. If an electrical failure seems to be present the Miram ASIC sets a fault flag which results in a fault counter in-crement or decrement. After 100 ms the corresponding fault code will be set. In case of an Open Wheel Speed Sensor, the fault is de-tected if the measured current falls below 1.4 ~ 3.5mA.	100 msec	Ignition latched	EBD: R0 ABS: R1 TC: R2 YSC: R2 HBA: R2 EDTR: R2 Brake AC:R0 HA : R2 ITPM :R2	**Display:** **PFV:** Yes	None
4035 [RF]	13								

PROPRIETARY NOTICE: This document is copyright and the property of TRW Automotive Inc. It is disclosed in confidence. It may not be copied (in whole or in part), disclosed to others or used for manufacturing, without the prior written consent of TRW Automotive Inc.
© TRW Automotive Inc. 2006

DTC Code	Fault symptom	Condition for recog-nition	Reason for fault	Detection rules	Detection time	Latch type	System response	Driver notification -------- PFV (Yes/No)	Remarks
4038 [LR]	13	Power ON, Continuous Failsafing	***-Defective wire harness to wheel speed sensor or ECU*** ***-Defective wheel speed sensor*** ***-Defective printed circuit board*** ***-Defective microprocessor***	**Open Wheel Speed Sensor** All Wheel Speed Sensors are checked periodically by the Miram ASIC. If an electrical failure seems to be present the Miram ASIC sets a fault flag which results in a fault counter increment or decrement. After 100 ms the corresponding fault code will be set. In case of an Open Wheel Speed Sensor, the fault is detected if the measured current falls below 1.4 ~ 3.5mA.	100 msec	Ignition latched	EBD: R0 ABS: R1 TC: R2 YSC: R2 HBA: R2 EDTR: R2 Brake AC:R0 HA : R2 ITPM :R2	**Display:** **PFV:** Yes	None
403B [RR]	13								

PROPRIETARY NOTICE: This document is copyright and the property of TRW Automotive Inc. It is disclosed in confidence. It may not be copied (in whole or in part), disclosed to others or used for manufacturing, without the prior written consent of TRW Automotive Inc.
© TRW Automotive Inc. 2006

5.1.2 Wheel Speed Sensor Ohmic Short Failure

DTC Code	Fault symptom	Condition for recog-nition	Reason for fault	Detection rules	Detection time	Latch type	System response	Driver notification -------- PFV (Yes/No)	Remarks
4032 [LF]	12	Power ON, Continuous Failsafing	***- Defective wheel speed sensor*** ***- Defective wire harness to wheel speed sensor*** ***- Sensor pins shorted*** ***- Defective printed circuit board*** ***- Defective System Asic*** ***- Defective microprocessor***	**Wheel Speed Sensor Ohmic Short Failure** Shorted Wheel Speed Sensor All Wheel Speed Sensors are checked periodically by the Miram ASIC. If an electrical failure seems to be present the Miram ASIC sets a fault flag which results in a fault counter increment or decrement. After 100 ms the corresponding fault code will be ngset. The Miram ASIC signals to failure flags that will be interpreted as a Shorted to ground failure and will cause a fault counter increment: • Low Side Over Current (measured current on the low side exceeds 40 ~ 80 mA.	100 msec	Ignition latched	EBD: R0 ABS: R1 TC: R2 YSC: R2 HBA: R2 EDTR: R2 Brake AC:R0 HA : R2 ITPM :R2	**Display:** **PFV:** Yes	None
4035 [RF]	12								

e

PROPRIETARY NOTICE: This document is copyright and the property of TRW Automotive Inc. It is disclosed in confidence. It may not be copied (in whole or in part), disclosed to others or used for manufacturing, without the prior written consent of TRW Automotive Inc.
© TRW Automotive Inc. 2006

DTC Code	Fault symptom	Condition for recog-nition	Reason for fault	Detection rules	Detection time	Latch type	System response	Driver notification -------- PFV (Yes/No)	Remarks
4038 [LR]	12	Power ON, Continuous Failsafing	***Defective wheel speed sensor*** ***- Defective wire harness to wheel speed sensor*** ***- Sensor pins shorted*** ***- Defective printed circuit board*** ***- Defective System Asic*** ***- Defective microprocessor***	**Wheel Speed Sensor Ohmic Short Failure** Shorted Wheel Speed Sensor All Wheel Speed Sensors are checked periodically by the Miram ASIC. If an electrical failure seems to be present the Miram ASIC sets a fault flag which results in a fault counter increment or decrement. After 100 ms the corresponding fault code will be set. The Miram ASIC signals to failure flags that will be interpreted as a Shorted to ground failure and will cause a fault counter increment: • Low Side Over Current (measured current on the low side exceeds 40 ~ 80 mA.	100 msec	Ignition latched	EBD: R0 ABS: R1 TC: R2 YSC: R2 HBA: R2 EDTR: R2 Brake AC:R0 HA : R2 ITPM :R2	**Display:** **PVF:** Yes	None
403B [RR]	12								

PROPRIETARY NOTICE: This document is copyright and the property of TRW Automotive Inc. It is disclosed in confidence. It may not be copied (in whole or in part), disclosed to others or used for manufacturing, without the prior written consent of TRW Automotive Inc.
© TRW Automotive Inc. 2006

5.1.3 Wheel Speed Sensor High side overcurrent Failures:

DTC Code	Fault symp-tom	Condition for recognition	Reason for fault	Detection rules	Detection time	Latch type	System response	Driver notification -------- PFV (Yes/No)	Remarks
4032 [LF]	12	Power ON, Continuous Failsafing	***-Defective wire harness to wheel speed sensor*** ***-Sensor pins shorted*** ***- Defective printed circuit board*** ***- Defective System Asic***	Shorted Wheel Speed Sensor (Highside to GND) All Wheel Speed Sensors are checked periodically by the Miram ASIC. If an electrical failure seems to be present the Miram ASIC sets a fault flag which results in a fault counter increment or decrement. After 100 ms the corresponding fault code will be set. In case of High Side shorted to ground, the Miram ASIC fault flag is set if the measured current on the high side exceeds 40 ~ 70 mA. (High Side Over Current)	100 msec	Ignition latched	EBD: R0 ABS: R1 TC: R2 YSC: R2 HBA: R2 EDTR: R2 Brake AC:R0 HA : R2 ITPM :R2	**Display:** **PFV:** Yes	None
4035 [RF]	12								

PROPRIETARY NOTICE: This document is copyright and the property of TRW Automotive Inc. It is disclosed in confidence. It may not be copied (in whole or in part), disclosed to others or used for manufacturing, without the prior written consent of TRW Automotive Inc.
© TRW Automotive Inc. 2006

DTC Code	Fault symp-tom	Condition for recognition	Reason for fault	Detection rules	Detection time	Latch type	System response	Driver notification -------- PFV(Yes/No)	Remarks
4038 [LR]	12	Power ON, Continuous Failsafing	***-Defective wire harness to wheel speed sensor*** ***-Sensor pins shorted*** ***- Defective printed circuit board*** ***- Defective System Asic***	Shorted Wheel Speed Sensor (Highside to GND) All Wheel Speed Sensors are checked periodically by the Miram ASIC. If an electrical failure seems to be present the Miram ASIC sets a fault flag which results in a fault counter increment or decrement. After 100 ms the corresponding fault code will be set. In case of High Side shorted to ground, the Miram ASIC fault flag is set if the measured current on the high side exceeds 40 ~ 70 mA. (High Side Over Current)	100 msec	Ignition latched	EBD: R0 ABS: R1 TC: R2 YSC: R2 HBA: R2 EDTR: R2 Brake AC:R0 HA : R2 ITPM :R2	**Display:** **PFV:** Yes	None
403B [RR]	12								

PROPRIETARY NOTICE: This document is copyright and the property of TRW Automotive Inc. It is disclosed in confidence. It may not be copied (in whole or in part), disclosed to others or used for manufacturing, without the prior written consent of TRW Automotive Inc.
© TRW Automotive Inc. 2006

5.1.4 Wheel Speed Sensor Ohmic Short to SUPPLY Failures :

DTC Code	Fault symp-tom	Condition for recognition	Reason for fault	Detection rules	Detection time	Latch type	System response	Driver notification -------- PFV(Yes/No)	Remarks
4032 [LF]	12	Power ON, Continuous Failsafing	***Defective wheel speed sensor*** ***- Defective wire harness to wheel speed sensor*** ***- Sensor pins shorted*** ***- Defective printed circuit board*** ***- Defective System Asic*** ***- Defective microprocessor***	**Wheel Speed Sensor Ohmic Short to Supply Failure** Wheel Speed Sensor High side Shorted to Battery: All Wheel Speed Sensors are checked periodically by the Miram ASIC. If an electrical failure seems to be present the Miram ASIC sets a fault flag which results in a fault counter increment or decrement. After 100 ms the corresponding fault code will be set. The Miram ASIC signals 1 failure flag that will be interpreted as a Shorted to supply failure and will cause a fault counter increment: • High Side shorted to battery voltage (difference between the VBat and the wheel speed sensor supply voltage is below 60mV)	100 msec	Condition Latched	EBD: R0 ABS: R1 TC: R2 YSC: R2 HBA: R2 EDTR: R2 Brake AC:R0 HA : R2 ITPM :R2	**Display:** **PFV:** Yes	None
4035 [RF]	12								

PROPRIETARY NOTICE: This document is copyright and the property of TRW Automotive Inc. It is disclosed in confidence. It may not be copied (in whole or in part), disclosed to others or used for manufacturing, without the prior written consent of TRW Automotive Inc.
© TRW Automotive Inc. 2006

DTC Code	Fault symp-tom	Condition for recognition	Reason for fault	Detection rules	Detection time	Latch type	System response	Driver notification -------- PFV (Yes/No)	Remarks
4038 [LR]	12	Power ON, Continuous Failsafing	***Defective wheel speed sensor*** ***- Defective wire harness to wheel speed sensor*** ***- Sensor pins shorted*** ***- Defective printed circuit board*** ***- Defective System Asic*** ***- Defective microprocessor***	**Wheel Speed Sensor Ohmic Short to Supply Failure** Wheel Speed Sensor High side Shorted to Battery: All Wheel Speed Sensors are checked periodically by the Miram ASIC. If an electrical failure seems to be present the Miram ASIC sets a fault flag which results in a fault counter increment or decrement. After 100 ms the corresponding fault code will be set. The Miram ASIC signals 1 failure flag that will be interpreted as a Shorted to supply failure and will cause a fault counter increment: • High Side shorted to battery voltage (difference between the VBat and the wheel speed sensor supply voltage is below 60mV)	100 msec	Condition Latched	EBD: R0 ABS: R1 TC: R2 YSC: R2 HBA: R2 EDTR: R2 Brake AC:R0 HA : R2 ITPM :R2	**Display:** **PFV:** Yes	None
403B [RR]	12								

PROPRIETARY NOTICE: This document is copyright and the property of TRW Automotive Inc. It is disclosed in confidence. It may not be copied (in whole or in part), disclosed to others or used for manufacturing, without the prior written consent of TRW Automotive Inc.
© TRW Automotive Inc. 2006

5.1.5 Wheel Speed Sensor Missing

DTC Code	Fault symptom	Condition for recognition	Reason for fault	Detection rules	Detection time	Latch type	System response	Driver notification -------- PFV(Yes/No)	Remarks
4031 [LF]	02	Power ON, Continuous Failsafing, Vehicle is moving	***- Wheel speed sensor not mounted correctly.*** ***- Wheel speed sensor to tone-ring gap out of tolerance.*** ***- Demagnitized tone ring.***	**Missing Wheel Speed Sensor** To detect a single missing wheel speed sensor, the unfiltered wheel velocity must remain below 0.417 m/s (1.5 km/h) for this wheel while the other wheels have a velocity above 1.667 m/s (6 km/h) for a minimum of 3 sec. In case of an ABS intervention, the filter time is increased to 15 sec. To detect two missing wheel speed sensors, the nominal filter times are increased to prevent false detections, but might be decreased again if the mean value of both undriven wheels is above 13.889 m/s (50 km/h). This results in a filter time between 3 sec and 30 sec without ABS interventions and 15 sec when the wheel is in dump state. Three missing sensors are detected with a filter time of 120 sec where no ABS intervention is possible. The detection logic is reset when all 4 sensors have a wheel speed above 1.667 m/s (6 km/h) the vehicle is at stand still. Additionally, there must not be a shorted sensor failure or open sensor failure already detected and the sensor supply must be enabled. This prevents having multiple faults set on the same wheel. If a shorted sensor or open sensor has already been detected or the sensor supply is disabled, the fault monitor for the missing sensor is reset for that wheel. If a complete axle (front or rear axle) is detected as "missing", the threshold is raised to 10 km/h.	3 sec – 10 sec for one, 10 sec – 30 sec for two (15 sec during ABS) and 120 sec for three missing sensors.	Ignition latched	EBD: R0 ABS: R1 TC: R2 YSC: R2 HBA: R2 EDTR: R2 Brake AC:R0 HA : R2 ITPM :R2	**Display:** **PFV:** Yes	**Note:** The missing wheel speed sensor monitoring is disabled, if excessive high voltage conditions or any other WSS failure(s) are present.
4034 [RF]	02								

PROPRIETARY NOTICE: This document is copyright and the property of TRW Automotive Inc. It is disclosed in confidence. It may not be copied (in whole or in part), disclosed to others or used for manufacturing, without the prior written consent of TRW Automotive Inc.
© TRW Automotive Inc. 2006

DTC Code	Fault symptom	Condition for recognition	Reason for fault	Detection rules	Detection time	Latch type	System response	Driver notification -------- PFV (Yes/No)	Remarks
4037 [LR]	02	Power ON, Continuous Failsafing, Vehicle is moving	***- Wheel speed sensor not mounted correctly.*** ***- Wheel speed sensor to tone-ring gap out of tolerance.*** ***- Demagnitized tone ring.***	**Missing Wheel Speed Sensor** To detect a single missing wheel speed sensor, the unfiltered wheel velocity must remain below 0.417 m/s (1.5 km/h) for this wheel while the other wheels have a velocity above 1.667 m/s (6 km/h) for a minimum of 3 sec. In case of an ABS intervention, the filter time is increased to 15 sec. To detect two missing wheel speed sensors, the nominal filter times are increased to prevent false detections, but might be decreased again if the mean value of both undriven wheels is above 13.889 m/s (50 km/h). This results in a filter time between 3 sec and 30 sec without ABS interventions and 15 sec when the wheel is in dump state. Three missing sensors are detected with a filter time of 120 sec where no ABS intervention is possible. The detection logic is reset when all 4 sensors have a wheel speed above 1.667 m/s (6 km/h) the vehicle is at stand still. Additionally, there must not be a shorted sensor failure or open sensor failure already detected and the sensor supply must be enabled. This prevents having multiple faults set on the same wheel. If a shorted sensor or open sensor has already been detected or the sensor supply is disabled, the fault monitor for the missing sensor is reset for that wheel. If a complete axle (front or rear axle) is detected as "missing", the threshold is raised to 10 km/h.	3 sec – 10 sec for one, 10 sec – 30 sec for two (15 sec during ABS) and 120 sec for three missing sensors.	Ignition latched	EBD: R0 ABS: R1 TC: R2 YSC: R2 HBA: R2 EDTR: R2 Brake AC:R0 HA : R2 ITPM :R2	**Display:** **PFV:** Yes	**Note:** The missing wheel speed sensor monitoring is disabled, if excessive high voltage conditions or any other WSS failure(s) are present.
403A [RR]	02								

PROPRIETARY NOTICE: This document is copyright and the property of TRW Automotive Inc. It is disclosed in confidence. It may not be copied (in whole or in part), disclosed to others or used for manufacturing, without the prior written consent of TRW Automotive Inc.
© TRW Automotive Inc. 2006

5.1.6 Wheel Speed Sensor Fast Missing

DTC Code	Fault symptom	Condition for recog-nition	Reason for fault	Detection rules	Detection time	Latch type	System response	Driver notification -------- PFV (Yes/No)	Remarks
4031 [LF]	02	Power ON, Continuous Failsafing, Vehicle is moving	***Wheel speed sensor not mounted cor-rectly.*** ***Wheel speed sensor to tone ring gap out of tolerance.*** ***Demagnetized tone ring.***	**Fast Missing Wheel Speed Sensor** This failsafe is only active from Ignition On until the vehi-cle reaches 15km/h for the first time. During this time the wheel speeds and wheel speed pulses are monitored. The wheel speed monitor starts at velocities above 4km/h. If a wheel speed sensor shows a velocity slower than 1.2km/h the wheel speed is considered to be missing and corresponding internal fault counter of the failsafe will be incremented. At the time the vehicle reaches 15km/h, these fault counters and the wheel speed pulse counters are used to decide whether a fault has to be latched or not. The failsafe will only latch a fault if only one wheel speed signal seems to be missing. If more than one wheel speed signal is missing, no fault will be latched by this failsafe because this is not required to be detected until 15km/h. If a fast missing fault has been detected the failsafe moni-tors the conditions until either the failure condition disap-pears for enough time to remove the fault code or the fault can be removed in case it has been confirmed by another wss fault code. Therefore the other wss failsafe runs independent from this failsafe and fast missing wss faults have no effect on the other failsafe (especially normal missing wss failsafe).	Depends on the acceleration	Condition latched	EBD: R0 ABS: R1 TC: R2 YSC: R2 HBA: R2 EDTR: R2 Brake AC:R0 HA : R2 ITPM :R2	**Display:** **PFV:** YES	**Note:** The missing wheel speed sensor monitoring is disabled, if excessive high voltage conditions or any other WSS failure(s) are present.
4034 [RF]]	02								

PROPRIETARY NOTICE: This document is copyright and the property of TRW Automotive Inc. It is disclosed in confidence. It may not be copied (in whole or in part), disclosed to others or used for manufacturing, without the prior written consent of TRW Automotive Inc.
© TRW Automotive Inc. 2006

DTC Code	Fault symptom	Condition for recog-nition	Reason for fault	Detection rules	Detection time	Latch type	System response	Driver notification -------- PFV (Yes/No)	Remarks
4037 [LR]	02	Power ON, Continuous Failsafing, Vehicle is moving	***Wheel speed sensor not mounted cor-rectly.*** ***Wheel speed sensor to tone ring gap out of tolerance.*** ***Demagnetized tone ring.***	**Fast Missing Wheel Speed Sensor** This failsafe is only active from Ignition On until the ve-hicle reaches 15km/h for the first time. During this time the wheel speeds and wheel speed pulses are monitored. The wheel speed monitor starts at velocities above 4km/h. If a wheel speed sensor shows a velocity slower than 1.2km/h the wheel speed is considered to be missing and corresponding internal fault counter of the failsafe will be incremented. At the time the vehicle reaches 15km/h, these fault counters and the wheel speed pulse counters are used to decide whether a fault has to be latched or not. The failsafe will only latch a fault if only one wheel speed signal seems to be missing. If more than one wheel speed signal is missing, no fault will be latched by this failsafe because this is not required to be detected until 15km/h. If a fast missing fault has been detected the failsafe moni-tors the conditions until either the failure condition disap-pears for enough time to remove the fault code or the fault can be removed in case it has been confirmed by another wss fault code. Therefore the other wss failsafe runs independent from this failsafe and fast missing wss faults have no effect on the other failsafe (especially normal missing wss failsafe)	Depends on the acceleration	Condition latched	EBD: R0 ABS: R1 TC: R2 YSC: R2 HBA: R2 EDTR: R2 Brake AC:R0 HA : R2 ITPM :R2	**Display:** **PFV:** YES	**Note:** The missing wheel speed sensor monitoring is disabled, if excessive highj voltage conditions or any other WSS failure(s) are present.
403A [RR]	02								

PROPRIETARY NOTICE: This document is copyright and the property of TRW Automotive Inc. It is disclosed in confidence. It may not be copied (in whole or in part), disclosed to others or used for manufacturing, without the prior written consent of TRW Automotive Inc.
© TRW Automotive Inc. 2006

5.1.7 Wheel Speed Sensor Too Fast Missing

DTC Code	Fault symptom	Condition for recog-nition	Reason for fault	Detection rules	Detection time	Latch type	System response	Driver notification -------- PFV (Yes/No)	Remarks
4031 [LF]	02	Power ON, Continuous Failsafing, Vehicle is moving	***Wheel speed sensor not mounted cor-rectly.*** ***Wheel speed sensor to tone ring gap out of tolerance.*** ***Demagnetized tone ring.***	**Too-Fast Missing Wheel Speed Sensor** If one wheel sensor reaches a speed over 6km / h, while the other three show a speed of less than 1.5km / h and no "Missing Sensor" fault has been reliably detected on one of the other wheels, then after the filter time the fault for an "Over spinning wheel " is set. In case a "Missing Sensor" fault has been reliably de-tected consecutive on three wheels then this error is not set/detected.	40sec	Condition latched	EBD: R2 ABS: R2 TC: R2 YSC: R2 HBA: R2 EDTR: R2 Brake AC:R0 HA : R2 ITPM :R2	**Display:** **PFV:** Yes	**Note:** The missing wheel speed sensor monitoring is disabled, if excessive high voltage conditions or any other WSS failure(s) are present.
4034 [RF]]	02								

PROPRIETARY NOTICE: This document is copyright and the property of TRW Automotive Inc. It is disclosed in confidence. It may not be copied (in whole or in part), disclosed to others or used for manufacturing, without the prior written consent of TRW Automotive Inc.
© TRW Automotive Inc. 2006

DTC Code	Fault symptom	Condition for recog-nition	Reason for fault	Detection rules	Detection time	Latch type	System response	Driver notification -------- PFV (Yes/No)	Remarks
4037 [LR]	02	Power ON, Continuous Failsafing, Vehicle is moving	***Wheel speed sensor not mounted cor-rectly.*** ***Wheel speed sensor to tone ring gap out of tolerance.*** ***Demagnetized tone ring.***	**Too Fast Missing Wheel Speed Sensor** If one wheel sensor reaches a speed over 6km / h, while the other three show a speed of less than 1.5km / h and no "Missing Sensor" fault has been reliably detected on one of the other wheels, then after the filter time the fault for an "Over spinning wheel " is set. In case a "Missing Sensor" fault has been reliably de-tected consecutive on three wheels then this error is not set/detected.	40sec	Condition latched	EBD: R2 ABS: R2 TC: R2 YSC: R2 HBA: R2 EDTR: R2 Brake AC:R0 HA : R2 ITPM :R2	**Display:** **PFV:** YES	**Note:** The missing wheel speed sensor monitoring is disabled, if excessive high voltage conditions or any other WSS failure(s) are present.
403A [RR]	02								

PROPRIETARY NOTICE: This document is copyright and the property of TRW Automotive Inc. It is disclosed in confidence. It may not be copied (in whole or in part), disclosed to others or used for manufacturing, without the prior written consent of TRW Automotive Inc.
© TRW Automotive Inc. 2006

5.1.8 Wheel Speed Sensor Erratic

DTC Code	Fault symptom	Condition for recognition	Reason for fault	Detection rules	Detection time	Latch type	System response	Driver notification -------- PFV (Yes/No)	Remarks
4031 [LF]	2F	Power ON, Continuous Failsafing, Vehicle is faster than 3.58m/s	***- Wheel speed sensor not mounted correctly.*** ***- Missing tooth or teeth on the wheel speed sensor tonering.*** ***- Electromagnetic interference (EMI).***	**Erratic Wheel Speed Sensor** The erratic sensor logic is used to detect unrealistic acceleration. The filtered vehicle velocity must be greater than 3.58 m/s (12.89 km/h) to start the monitor routine for this fault. If then the absolute value of the unfiltered wheel acceleration is greater than 491 m/s² (50g), an erratic wheel speed sensor may be present. The fault occurrence counter will be incremented by 1000 count(s) every 5 msec. If the fault occurrence counter reaches 40000 count(s), then an erratic wheel speed sensor fault is set. If the wheel acceleration is less than or equal to the above threshold, then the fault occurrence counter is decremented by 5 every 5 msec. If the fault occurrence counter reaches 30000 count(s), then an erratic wheel speed sensor fault is cleared. The counter increasing is done with a quantifier x200 higher as decreasing counter. This allows the system to slowly decay the pass/fail quantifier so that a marginal improper functioning sensor can be detected.	200 msec up to several seconds	Ignition latched	EBD: R0 ABS: R1 TC: R2 YSC: R2 HBA: R2 EDTR: R2 Brake AC:R0 HA : R2 ITPM :R2	**Display:** **PFV:** Yes	None
4034 [RF]	2F								

PROPRIETARY NOTICE: This document is copyright and the property of TRW Automotive Inc. It is disclosed in confidence. It may not be copied (in whole or in part), disclosed to others or used for manufacturing, without the prior written consent of TRW Automotive Inc.
© TRW Automotive Inc. 2006

DTC Code	Fault symptom	Condition for recognition	Reason for fault	Detection rules	Detection time	Latch type	System response	Driver notification -------- PFV (Yes/No)	Remarks
4037 [LR]	2F	Power ON, Continuous Failsafing, Vehicle is faster than 3.58m/s	***- Wheel speed sensor not mounted correctly.*** ***- Missing tooth or teeth on the wheel speed sensor tone-ring.*** ***- Electro-magnetic interference (EMI).***	**Erratic Wheel Speed Sensor** The erratic sensor logic is used to detect unrealistic acceleration. The filtered vehicle velocity must be greater than 3.58 m/s (12.89 km/h) to start the monitor routine for this fault. If then the absolute value of the unfiltered wheel acceleration is greater than 491 m/s² (50g), an erratic wheel speed sensor may be present. The fault occurrence counter will be incremented by 1000 count(s) every 5 msec. If the fault occurrence counter reaches 40000 count(s), then an erratic wheel speed sensor fault is set. If the wheel acceleration is less than or equal to the above threshold, then the fault occurrence counter is decremented by 5 every 5 msec. If the fault occurrence counter reaches 30000 count(s), then an erratic wheel speed sensor fault is cleared. The counter increasing is done with a quantifier x200 higher as decreasing counter. This allows the system to slowly decay the pass/fail quantifier so that a marginal improper functioning sensor can be detected.	200 msec up to several seconds	Ignition latched	EBD: R0 ABS: R1 TC: R2 YSC: R2 HBA: R2 EDTR: R2 Brake AC:R0 HA : R2 ITPM :R2	**Display:** **PFV:** Yes	None
403A [RR]	2F								

PROPRIETARY NOTICE: This document is copyright and the property of TRW Automotive Inc. It is disclosed in confidence. It may not be copied (in whole or in part), disclosed to others or used for manufacturing, without the prior written consent of TRW Automotive Inc.
© TRW Automotive Inc. 2006

5.1.9 Wheel speed Sensor Dropout

DTC Code	Fault symptom	Condition for recognition	Reason for fault	Detection rules	Detection time	Latch type	System response	Driver notification -------- PFV(Yes/No)	Remarks
4031 [LF]	04	Power ON, Continuous Failsafing, Vehicle is faster than 6.43m/s	***Wheel speed sensor not mounted correctly.*** ***Defective wheel speed sensor. Missing tooth or teeth on the wheel speed sensor tone ring.***	**Wheel Speed Sensor Dropout** If the brake pedal is applied a higher speed threshold from 7.81 m/s (28.13km/h) is taken because wheels can decelerate faster in this condition. In the other way round a lower threshold from 6.43 m/s (23.13 km/h) is taken if the brake pedal is not applied. The thresholds are dependent on tire size and number of teeth (assumed vehicle with 1.880m tire circumference and 48 teeth). Furthermore it's possible to take different thresholds for front and rear axle. But in this case the values are the same. If the last valid wheel velocity is greater than the wheel speed velocity threshold set above, the difference in time	40 msec	Ignition latched	EBD: R0 ABS: R1 TC: R2 YSC: R2 HBA: R2 EDTR: R2 Brake AC:R0	**Display:** 	None

PROPRIETARY NOTICE: This document is copyright and the property of TRW Automotive Inc. It is disclosed in confidence. It may not be copied (in whole or in part), disclosed to others or used for manufacturing, without the prior written consent of TRW Automotive Inc.
© TRW Automotive Inc. 2006

DTC Code	Fault symptom	Condition for rec-ognition	Reason for fault	Detection rules	Detection time	Latch type	System response	Driver notification -------- PFV(Yes/No)	Remarks
4034 [RF]	04			from the last time for this fault is greater than 40 msec, and the filtered vehicle velocity is above 3.58 m/s then a wheel speed sensor dropout fault is detected. If any of these conditions are not true then conditions are not correct to do dropout detection so reset the fault monitor. When a positive wheel speed sensor acceleration is de-tected that is above 392m/s² (40g), a timer is initialized to hold off wheel speed sensor dropout detection for 1000 msec. Once this sudden acceleration is detected (and the timer is greater than zero), subsequent accelera-tions/decelerations greater than 294 m/s² (30g) will reset the timer to the greater of the current timer value or 500 msec. This is done to prevent setting a fault during subsequent performance activity. Once the timer decays to zero (or is already zero), the wheel speed sensordrop-out monitor checks if any wheel speed sensor edges have been detected. If wheel speed sensor edges have been detected then we check if the wheel velocity is greater than 0.2236 m/s (0.8 km/h). If it is then we can pass this failsafe. If not we reset the fault monitor because we can not monitor this fault condition at this time. This detection will be run once every 5 msec.			HA : R2 ITPM :R2	**PFV:** Yes	

PROPRIETARY NOTICE: This document is copyright and the property of TRW Automotive Inc. It is disclosed in confidence. It may not be copied (in whole or in part), disclosed to others or used for manufacturing, without the prior written consent of TRW Automotive Inc.
© TRW Automotive Inc. 2006

DTC Code	Fault symptom	Condition for rec-ognition	Reason for fault	Detection rules	Detection time	Latch type	System response	Driver notification -------- PFV (Yes/No)	Remarks
4037 [LR]	04	Power ON, Continuous Failsafing, Vehicle is faster than 6.43m/s	***Wheel speed sensor not mounted cor-rectly.*** ***Defective wheel speed sensor. Missing tooth or teeth on the wheel speed sensor tone ring.***	**Wheel Speed Sensor Dropout** If the brake pedal is applied a higher speed threshold from 7.81 m/s (28.13km/h) is taken because wheels can decel-erate faster in this condition. In the other way round a lower threshold from 6.43 m/s (23.13 km/h) is taken if the brake pedal is not applied. The thresholds are dependent on tire size and number of teeth (assumed vehicle with 1.880m tire circumference and 48 teeth). Furthermore it's possible to take different thresholds for front and rear axle. But in this case the values are the same. If the last valid wheel velocity is greater than the wheel speed velocity threshold set above, the difference in time	40 msec	Ignition latched	EBD: R0 ABS: R1 TC: R2 YSC: R2 HBA: R2 EDTR: R2 Brake AC:R0	**Display:** 	None

PROPRIETARY NOTICE: This document is copyright and the property of TRW Automotive Inc. It is disclosed in confidence. It may not be copied (in whole or in part), disclosed to others or used for manufacturing, without the prior written consent of TRW Automotive Inc.
© TRW Automotive Inc. 2006

DTC Code	Fault symptom	Condition for rec-ognition	Reason for fault	Detection rules	Detection time	Latch type	System response	Driver notification -------- PFV (Yes/No)	Remarks
403A [RR]	04			from the last time for this fault is greater than 40 msec, and the filtered vehicle velocity is above 3.58 m/s then a wheel speed sensor dropout fault is detected. If any of these conditions are not true then conditions are not correct to do dropout detection so reset the fault monitor. When a positive wheel speed sensor acceleration is de-tected that is above 392m/s² (40g), a timer is initialized to hold off wheel speed sensor dropout detection for 1000 msec. Once this sudden acceleration is detected (and the timer is greater than zero), subsequent accelera-tions/decelerations greater than 294 m/s² (30g) will reset the timer to the greater of the current timer value or 500 msec. This is done to prevent setting a fault during subsequent performance activity. Once the timer decays to zero (or is already zero), the wheel speed sensordrop-out monitor checks if any wheel speed sensor edges have been detected. If wheel speed sensor edges have been detected then we check if the wheel velocity is greater than 0.2236 m/s (0.8 km/h). If it is then we can pass this failsafe. If not we reset the fault monitor because we can not monitor this fault condition at this time. This detection will be run once every 5 msec.			HA : R2 ITPM :R2	**PFV:** Yes	

PROPRIETARY NOTICE: This document is copyright and the property of TRW Automotive Inc. It is disclosed in confidence. It may not be copied (in whole or in part), disclosed to others or used for manufacturing, without the prior written consent of TRW Automotive Inc.
© TRW Automotive Inc. 2006

5.1.10 Wheel Speed Sensor Shadow Zone Failure

DTC Code	Fault symptom	Condition for recognition	Reason for fault	Detection rules	Detection time	Latch type	System response	Driver notification -------- PFV(Yes/No)	Remarks
4032 [LF]	1D	Power ON, Continuous Failsafing, Vehicle is moving	***High resistance of wiring harness Resistive short to ground or system voltage (leakage current)***	**Shadow/ Grey Zone Failure** All Wheel Speed Sensors are checked periodically by the Miram ASIC. If an electrical failure seems to be present the Miram ASIC sets a fault flag which results in a fault counter increment or decrement. A Shadow Zone Failure means the wheel speed sensor current is in an undefined range between the 7 and 14mA levels. If the signal remains in range of the 7/14mA switching threshold there is a high risk to detect incorrect or miss wheel speed pulses. Therefore the Miram ASIC sets the Grey Zone failure flag if the current remains for a complete switching time within the grey zone of 400 ~ 600µA around the switching threshold (9.0 ~ 10.6mA). The failure flag is set directly if such a situation occurs within a loop time. The flag is reset after it has been read. The Miram failure flag is read every 5ms and causes a fault counter update corresponding to its status. (up/down counter) The fault code is set at the time the fault counter reaches 100ms detection time.	100msec	Ignition latched	EBD: R0 ABS: R1 TC: R2 YSC: R2 HBA: R2 EDTR: R2 Brake AC:R0 HA : R2 ITPM :R2	**Display:** **PFV:** Yes	None
4035 [RF]	1D								

PROPRIETARY NOTICE: This document is copyright and the property of TRW Automotive Inc. It is disclosed in confidence. It may not be copied (in whole or in part), disclosed to others or used for manufacturing, without the prior written consent of TRW Automotive Inc.
© TRW Automotive Inc. 2006

DTC Code	Fault symptom	Condition for recog-nition	Reason for fault	Detection rules	Detection time	Latch type	System response	Driver notification -------- PFV (Yes/No)	Remarks
4038 [LR]	1D	Power ON, Continuous Failsafing, Vehicle is moving	***High resistance of wiring har-ness*** ***Resistive short to ground or system voltage (leakage cur-rent)***	**Shadow/ Grey Zone Failure** All Wheel Speed Sensors are checked periodically by the Miram ASIC. If an electrical failure seems to be present the Miram ASIC sets a fault flag which results in a fault counter in-crement or decrement. A Shadow Zone Failure means the wheel speed sensor current is in an undefined range between the 7 and 14mA levels. If the signal remains in range of the 7/14mA switching threshold there is a high risk to detect incorrect or miss wheel speed pulses. Therefore the Miram ASIC sets the Grey Zone failure flag if the current remains for a complete switching time within the grey zone of 400 ~ 600µA around the switching threshold (9.0 ~ 10.6mA). The failure flag is set directly if such a situation occurs within a loop time. The flag is reset after it has been read. The Miram failure flag is read every 5ms and causes a fault counter update corresponding to its status. (up/down counter).The fault code is set at the time the fault counter reaches 100ms detection time.	100ms	Ignition latched	EBD: R0 ABS: R1 TC: R2 YSC: R2 HBA: R2 EDTR: R2 Brake AC:R0 HA : R2 ITPM :R2	**Display:** **PFV:** Yes	None
403B [RR]	1D								

PROPRIETARY NOTICE: This document is copyright and the property of TRW Automotive Inc. It is disclosed in confidence. It may not be copied (in whole or in part), disclosed to others or used for manufacturing, without the prior written consent of TRW Automotive Inc.
© TRW Automotive Inc. 2006

5.1.11 Mismatched Tire

DTC Code	Fault symptom	Condition for recognition	Reason for fault	Detection rules	Detection time	Latch type	System response	Driver notification -------- PFV (Yes/No)	Remarks
4078	95	Power ON, Continuous Failsafing,	***Anything that generates consistent differences in apparent wheel rotational speed.*** ***- Significantly different size tires installed on the vehicle.*** ***- Different number of teeth on the exciter rings.***	**Mismatched Tire** INHIBIT_CONDITIONS: 1. ANY WHEEL SPEED SENSOR IS INVALID. 2. YSC GETS ACTIVE ON ANY WHEEL. 3 .CORNERING IS DETECTED (UNLESS A MINISPARE TIRE IS SUSPECTED) 4. SPINNING WHEELS ARE DETECTED. 5. BRAKING IS DETECTED. 6. VEHICLE IS IN A DIAGNOSTIC MODE. 7.THE VEHICLE SPEED IS BELOW 15KPH. ENABLE_CONDITIONS: IGNITION ON Small differences between the circumference of a wheel and the others are corrected automatically. This is done until an effective speed difference of 17%. Does the difference reach 20% the mismatch tire fault is set. The fault detection and the ratio adjustment are deactivated in case: - one unfiltered wheel speed is smaller than 15 kph - cornering is detected - spinning wheels are detected - braking is detected - another wheel speed sensor faults exist NOTE: TIME FOR ADJUSTMENT DEPENDS ON DRIVING CONDITIONS	Immediate	Ignition latched	EBD: R2 ABS: R2 TC: R2 YSC: R2 HBA: R2 EDTR: R2 Brake AC:R0 HA : R2 ITPM :R2	**Display:** **PFV:** No	Detection inhibitor: any wheel speed sensor faultABS / TC / VSC regulation

PROPRIETARY NOTICE: This document is copyright and the property of TRW Automotive Inc. It is disclosed in confidence. It may not be copied (in whole or in part), disclosed to others or used for manufacturing, without the prior written consent of TRW Automotive Inc.
© TRW Automotive Inc. 2006

5.1.12 Wheel Speed Sensor TYPE Mismatch

DTC Code	Fault symptom	Condition for recog-nition	Reason for fault	Detection rules	Detection time	Latch type	System response	Driver notification -------- PFV (Yes/No)	Remarks
4031 [LF]	95		***-wrong sensor type mounted*** ***- wheel speed sensor mag-netic field is too weak*** ***- pole wheel oscillate***	**Wrong Wheel Speed Sensor Type** Under normal conditions a standard 7 / 14mA wheel speed sensor generates an output signal with a nominal duty cycle of 50%. The duty cycle can be influenced by accel-eration / deceleration as well as pole ring tolerances but it should be in range of 30% - 70%. If an intelligent 2-level PWM wheel speed sensor is in-stalled in the vehicle, the duty cycle is usually not 50% because the pulse length high will be in specific ranges that represent the different information that can be trans-mitted by the sensor and the pulse length low corresponds to the remaining time between the wheel speed pulses. The algorithm to detect those incorrect 2-level PWM sen-sors uses pulse length measurement to determine if the signal corresponds to an intelligent 2-level PWM or stan-dard 2-level wheel speed sensor. The failsafe is running from ignition on until the sensor types have been detected. The detection time is depending on the driving situation**.**	Immediately	Condition latched	EBD: R0 ABS: R1 TC: R2 YSC: R2 HBA: R2 EDTR: R2 Brake AC:R0 HA : R2 ITPM :R2	**Display:** **PFV:** Yes	Detection inhibitor:Velocity more than 20 km/hIdle time is more than 1,5 secDetection time longer than 60 s
4034 [RF]	95								

PROPRIETARY NOTICE: This document is copyright and the property of TRW Automotive Inc. It is disclosed in confidence. It may not be copied (in whole or in part), disclosed to others or used for manufacturing, without the prior written consent of TRW Automotive Inc.
© TRW Automotive Inc. 2006

DTC Code	Fault symptom	Condition for recog-nition	Reason for fault	Detection rules	Detection time	Latch type	System response	Driver notification -------- PFV (Yes/No)	Remarks
4037 [LR]	95	During Power-up and after every clear Diagnostic information command	***wrong sensor type mounted - wheel speed sensor mag-netic field is too week - pole wheel oscillate***	**Wrong Wheel Speed Sensor Type** Under normal conditions a standard 7 / 14mA wheel speed sensor generates an output signal with a nominal duty cycle of 50%. The duty cycle can be influenced by accel-eration / deceleration as well as pole ring tolerances but it should be in range of 30% - 70%. If an intelligent 2-level PWM wheel speed sensor is in-stalled in the vehicle, the duty cycle is usually not 50% because the pulse length high will be in specific ranges that represent the different information that can be trans-mitted by the sensor and the pulse length low corresponds to the remaining time between the wheel speed pulses. The algorithm to detect those incorrect 2-level PWM sen-sors uses pulse length measurement to determine if the signal corresponds to an intelligent 2-level PWM or stan-dard 2-level wheel speed sensor. The failsafe is running from ignition on until the sensor types have been detected. The detection time is depending on the driving situation.	Immediate	Condition latched	EBD: R0 ABS: R1 TC: R2 YSC: R2 HBA: R2 EDTR: R2 Brake AC:R0 HA : R2 ITPM :R2	**Display:** **PFV:** Yes	None
403A [RR]	95								

PROPRIETARY NOTICE: This document is copyright and the property of TRW Automotive Inc. It is disclosed in confidence. It may not be copied (in whole or in part), disclosed to others or used for manufacturing, without the prior written consent of TRW Automotive Inc.
© TRW Automotive Inc. 2006

5.1.13 Both wheel speed sensors on the rear axle failed

DTC Code	Fault symptom	Condition for recog-nition	Reason for fault	Detection rules	Detection time	Latch type	System response	Driver notification -------- PFV (Yes/No)	Remarks
FFFF	FF	Power ON, Continuous Failsafing,	Both WSS of the rear axle has been ohmic or logical fault.	Both WSS of the rear axle are invalid	Immediate	Condition latched	EBD: R2 ABS: R2 TC: R2 YSC: R2 HBA: R2 EDTR: R2 Brake AC:R0 HA : R2 ITPM :R2	**Display:** **PFV:** No	None

PROPRIETARY NOTICE: This document is copyright and the property of TRW Automotive Inc. It is disclosed in confidence. It may not be copied (in whole or in part), disclosed to others or used for manufacturing, without the prior written consent of TRW Automotive Inc.
© TRW Automotive Inc. 2006

5.1.14 Both wheel speed sensors on the front axle failed

DTC Code	Fault symptom	Condition for recog-nition	Reason for fault	Detection rules	Detection time	Latch type	System response	Driver notification -------- PFV (Yes/No)	Remarks
FFFF	FF	Power ON, Continuous Failsafing,	Both WSS of the front axle has been ohmic or logical fault.	Both WSS of the front axle are invalid	Immediate	Condition latched	EBD: R0 ABS: R1 TC: R2 YSC: R2 HBA: R2 EDTR: R2 Brake AC:R0 HA : R2 ITPM :R2	**Display:** **PFV:** No	None

PROPRIETARY NOTICE: This document is copyright and the property of TRW Automotive Inc. It is disclosed in confidence. It may not be copied (in whole or in part), disclosed to others or used for manufacturing, without the prior written consent of TRW Automotive Inc.
© TRW Automotive Inc. 2006

5.1.15 Multiple wheel speed failures have occurred

DTC Code	Fault symptom	Condition for recog-nition	Reason for fault	Detection rules	Detection time	Latch type	System response	Driver notification -------- PFV (Yes/No)	Remarks
FFFF	FF	Power ON, Continuous Failsafing,	More than two WSS has been ohmic or logical fault.	More than two WSS are invalid.	Immediate	Condition latched	EBD: R2 ABS: R2 TC: R2 YSC: R2 HBA: R2 EDTR: R2 Brake AC:R0 HA : R2 ITPM :R2	**Display:** **PFV:** No	None

PROPRIETARY NOTICE: This document is copyright and the property of TRW Automotive Inc. It is disclosed in confidence. It may not be copied (in whole or in part), disclosed to others or used for manufacturing, without the prior written consent of TRW Automotive Inc.
© TRW Automotive Inc. 2006

5.2 Valve Solenoid Faults

The EBC460 Hardware is equipped with twelve (eight in the case of an ABS only system) coils to control the hydraulic valves. The four ABS inlet valves are normally open. The four ABS outlet valves are normally closed. The two TC Supply valves are normally open. The two TC switching valves are normally closed (also see the following hydraulic layout). The solenoids for the twelve respectively eight valves are tested during start up and afterwards continuously supervised during the ignition run.

To detect any solenoid failure short test pulses are supplied to the coils. These pulses have **no effect** to the hydraulic system.
Outside any control cycle the repetition rate for these test pulses is slow to reduce EMI effects. In this project every 5 sec another solenoid is tested. This means that the time, if a solenoid fault is detected, could rise up to 12 * 5 s = 60 seconds in an IVD/IVDC H/W (ABS: 8 * 5 s = 40 s).
If a fault is detected during an ABS event, the system is reduced or completely inhibit, after the control cycle is finished.
If a solenoid is turned to be tested the fault detection time would be 15 ms for a shorted solenoid and 30 ms for the remaining solenoid faults.

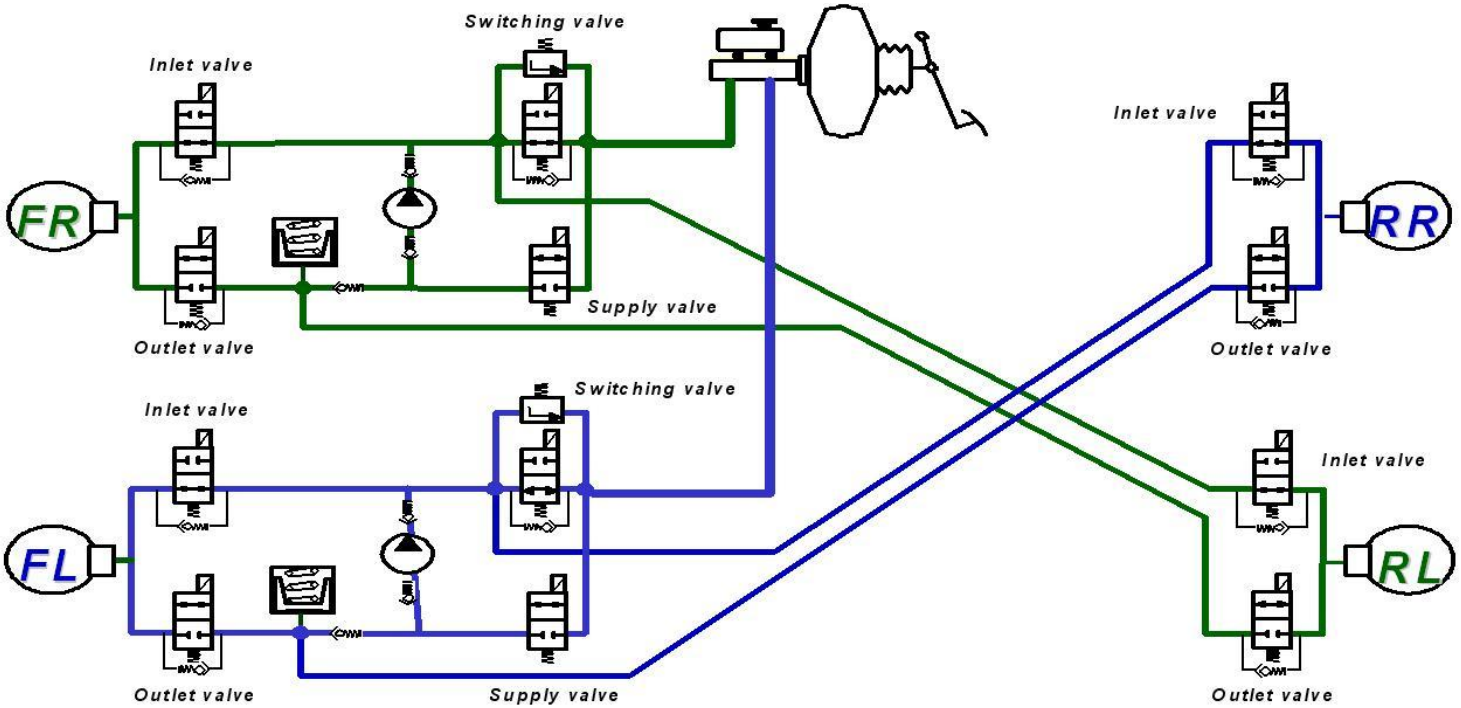

PROPRIETARY NOTICE: This document is copyright and the property of TRW Automotive Inc. It is disclosed in confidence. It may not be copied (in whole or in part), disclosed to others or used for manufacturing, without the prior written consent of TRW Automotive Inc.
© TRW Automotive Inc. 2006

5.2.1 Open solenoid

DTC Code	Fault symptom	Condition for recognition	Reason for fault	Detection rules	Detection time	Latch type	System response	Driver notification -------- PFV (Yes/No)	Remarks
4010 [ISO LF]	13	Power ON, Continuous Failsafing as long as sysmte voltage is greater than 3V range	***- Defective Solenoid*** ***- Defective solenoid driver FET*** ***- Defective printed circuit board*** ***- Defective microprocessor*** ***- Anything that keeps solenoid feedback voltage low when the solenoid is not energized***	**Open solenoid** Vehicle battery voltage is applied to the high side of the solenoid coils in the ECU assembly by the power switch. The solenoids are energized using a field effect transistor (FET) to connect the low side of the coil to ground. Whenever the power switch is closed and the driver transistor is not turned on (solenoid commanded off) the feedback voltage should be high. If the solenoid feedback voltage is measured on an A/D pin and the voltage measured is greater than 43 % and less than 65 % of the detected battery voltage for 30 msec, an open solenoid fault is indicated. This fault symptom can not be detected if the solenoid feedback goes to a GIO pin. Feedback is continuously monitored and compared to the requested valve solenoid state (on/off).	30 msec	Ignition latched	EBD: R0 ABS: R1 TC: R1 YSC: R2 HBA: R2 EDTR: R0 Brake AC:R0 HA : R2 ITPM :R0	**Display:** **PFV:** No	None
4014 [ISO RF]	13								

PROPRIETARY NOTICE: This document is copyright and the property of TRW Automotive Inc. It is disclosed in confidence. It may not be copied (in whole or in part), disclosed to others or used for manufacturing, without the prior written consent of TRW Automotive Inc.
© TRW Automotive Inc. 2006

DTC Code	Fault symp-tom	Condition for recognition	Reason for fault	Detection rules	Detection time	Latch type	System response	Driver notification -------- PFV (Yes/No)	Remarks
4018 [ISO LR]	13	Power ON, Continuous Failsafing as long as sysmte voltage is greater than 3V	***- Defective Solenoid*** ***- Defective sole-noid driver FET*** ***- Defective printed circuit board*** ***- Defective micro-processor*** ***- Anything that keeps solenoid feedback voltage low when the so-lenoid is not ener-gized***	**Open solenoid** Vehicle battery voltage is applied to the high side of the sole-noid coils in the ECU assembly by the power switch. The solenoids are energized using a field effect transistor (FET) to connect the low side of the coil to ground. Whenever the power switch is closed and the driver transistor is not turned on (solenoid commanded off) the feedback voltage should be high. If the solenoid feedback voltage is measured on an A/D pin and the voltage measured is greater than 43 % and less than 65 % of the detected battery voltage for 30 msec, an open solenoid fault is indicated. This fault symptom can not be detected if the solenoid feedback goes to a GIO pin. Feedback is continuously monitored and compared to the requested valve solenoid state (on/off).	30 msec	Ignition latched	EBD: R2 ABS: R2 TC: R1 YSC: R2 HBA: R2 EDTR: R0 Brake AC:R0 HA : R2 ITPM :R0	**Display:** **PFV:** No	None
401C [ISO RR]	13								

PROPRIETARY NOTICE: This document is copyright and the property of TRW Automotive Inc. It is disclosed in confidence. It may not be copied (in whole or in part), disclosed to others or used for manufacturing, without the prior written consent of TRW Automotive Inc.
© TRW Automotive Inc. 2006

DTC Code	Fault symptom	Condition for recog-nition	Reason for fault	Detection rules	Detection time	Latch type	System response	Driver notification -------- PFV (Yes/No)	Remarks
4011 [DumpLF]	13	Power ON, Continuous Failsafing as long as sysmte voltage is greater than 3V	***- Defective Solenoid*** ***- Defective sole-noid driver FET*** ***- Defective printed circuit board*** ***- Defective micro-processor*** ***- Anything that keeps solenoid feedback voltage low when the so-lenoid is not en-ergized***	**Open solenoid** Vehicle battery voltage is applied to the high side of the solenoid coils in the ECU assembly by the power switch. The solenoids are energized using a field effect transistor (FET) to connect the low side of the coil to ground. When-ever the power switch is closed and the driver transistor is not turned on (solenoid commanded off) the feedback vol-tage should be high. If the solenoid feedback voltage is measured on an A/D pin and the voltage measured is greater than 43 % and less than 65 % of the detected bat-tery voltage for 30 msec, an open solenoid fault is indi-cated. This fault symptom can not be detected if the sole-noid feedback goes to a GIO pin. Feedback is continuously monitored and compared to the requested valve solenoid state (on/off).	30 msec	Ignition latched	EBD: R0 ABS: R1 TC: R1 YSC: R2 HBA: R2 EDTR: R0 Brake AC:R0 HA : R2 ITPM :R0	**Display:** **PFV:** No	None
4015 [DumpRF]	13								

PROPRIETARY NOTICE: This document is copyright and the property of TRW Automotive Inc. It is disclosed in confidence. It may not be copied (in whole or in part), disclosed to others or used for manufacturing, without the prior written consent of TRW Automotive Inc.
© TRW Automotive Inc. 2006

DTC Code	Fault symptom	Condition for recog-nition	Reason for fault	Detection rules	Detection time	Latch type	System response	Driver notification -------- PFV (Yes/No)	Remarks
4019 [DumpLR]	13	Power ON, Continuous Failsafing as long as sysmte greater than 3V	***- Defective Solenoid*** ***- Defective sole-noid driver FET*** ***- Defective printed circuit board*** ***- Defective micro-processor*** ***- Anything that keeps solenoid feedback voltage low when the so-lenoid is not en-ergized***	**Open solenoid** Vehicle battery voltage is applied to the high side of the solenoid coils in the ECU assembly by the power switch. The solenoids are energized using a field effect transistor (FET) to connect the low side of the coil to ground. When-ever the power switch is closed and the driver transistor is not turned on (solenoid commanded off) the feedback vol-tage should be high. If the solenoid feedback voltage is measured on an A/D pin and the voltage measured is greater than 43 % and less than 65 % of the detected bat-tery voltage for 30 msec, an open solenoid fault is indi-cated. This fault symptom can not be detected if the sole-noid feedback goes to a GIO pin. Feedback is continuously monitored and compared to the requested valve solenoid state (on/off).	30 msec	Ignition latched	EBD: R1 ABS: R2 TC: R1 YSC: R2 HBA: R2 EDTR: R0 Brake AC:R0 HA : R2 ITPM :R0	**Display:** **PFV:** No	None
401D [DumpRR]	13								

PROPRIETARY NOTICE: This document is copyright and the property of TRW Automotive Inc. It is disclosed in confidence. It may not be copied (in whole or in part), disclosed to others or used for manufacturing, without the prior written consent of TRW Automotive Inc.
© TRW Automotive Inc. 2006

(Only use for ESC)

DTC Code	Fault symptom	Condition for recognition	Reason for fault	Detection rules	Detection time	Latch type	System response	Driver notification -------- PFV(Yes/No)	Remarks
4001 [TC ISO 1]	13	Power ON, Continuous Failsafing as long as sysmte greater than 3V	***- Defective Solenoid*** ***- Defective solenoid driver FET*** ***- Defective printed circuit board*** ***- Defective microprocessor*** ***- Anything that keeps solenoid feedback voltage low when the solenoid is not energized***	**Open solenoid** Vehicle battery voltage is applied to the high side of the solenoid coils in the ECU assembly by the power switch. The solenoids are energized using a field effect transistor (FET) to connect the low side of the coil to ground. Whenever the power switch is closed and the driver transistor is not turned on (solenoid commanded off) the feedback voltage should be high. If the solenoid feedback voltage is measured on an A/D pin and the voltage measured is greater than 43 % and less than 65 % of the detected battery voltage for 30 msec, an open solenoid fault is indicated. This fault symptom can not be detected if the solenoid feedback goes to a GIO pin. Feedback is continuously monitored and compared to the requested valve solenoid state (on/off).	30 msec	Ignition latched	EBD: R0 ABS: R0 TC: R1 YSC: R2 HBA: R2 EDTR: R0 Brake AC:R0 (for supply BrakeAc: R1) HA : R2 ITPM :R0	**Display:** **PFV:** No	These solenoids are not available in ABS only units.
4003 [TC ISO 2]	13								
4002 [TC SUPPLY 1]	13								
4004 [TC SUPPLY 2]	13								

PROPRIETARY NOTICE: This document is copyright and the property of TRW Automotive Inc. It is disclosed in confidence. It may not be copied (in whole or in part), disclosed to others or used for manufacturing, without the prior written consent of TRW Automotive Inc.
© TRW Automotive Inc. 2006

5.2.2 Shorted Solenoid Driver

DTC Code	Fault symptom	Condition for recog-nition	Reason for fault	Detection rules	Detection time	Latch type	System response	Driver notification -------- PFV (Yes/No)	Remarks
4010 [ISO LF]	13	Power ON, Continuous Failsafing as long as sysmte voltage is greater than 3V	***- Defective solenoid driver FET.*** ***- Defective printed circuit board.*** ***- Defective microprocessor.*** ***- Anything that keeps solenoid feedback voltage high when the solenoid is supposed to be energized.***	**Shorted Solenoid Driver** FAULT DETECTION CONDITIONS: Vehicle battery voltage is applied to the high side of the solenoid coils in the ECU assembly by the power switch. The solenoids are energized using a field effect transistor (FET) to connect the low side of the coil to ground. Whenever the power switch is closed and the driver transistor is not turned on (solenoid commanded off) the feedback voltage should be high. If the solenoid feedback voltage is measured on an A/D pin and the voltage measured is less than 43 % of the detected battery voltage for 30 msec, a shorted solenoid driver fault is indicated. The on/off threshold is different if the solenoid feedback is measured on a GIO pin (see TMS 470 spec. sheet). Feedback is continuously monitored and compared to the requested valve solenoid state (on/off).	30 msec	Ignition latched	EBD: R2 ABS: R2 TC: R2 YSC: R2 HBA: R2 EDTR: R0 Brake AC:R2 HA : R2 ITPM :R0	**Display:** **PFV:** No	None
4014 [ISO RF]	13								
4018 [ISO LR]	13								
401C [ISO RR]	13								
4011 [Dump LF]	13								
4015 [Dump RF]	13								
4019 [Dump LR]	13								
401D [Dump RR]	13								

PROPRIETARY NOTICE: This document is copyright and the property of TRW Automotive Inc. It is disclosed in confidence. It may not be copied (in whole or in part), disclosed to others or used for manufacturing, without the prior written consent of TRW Automotive Inc.
© TRW Automotive Inc. 2006

(Only use for ESC)

DTC Code	Fault symptom	Condition for recognition	Reason for fault	Detection rules	Detection time	Latch type	System response	Driver notification -------- PFV (Yes/No)	Remarks
4001 [TC-ISO 1]	13	Power ON, Continuous Failsafing as long as sysmte voltage is greater than 3V	***Defective solenoid driver FET.*** ***Defective printed circuit board.*** ***Defective microprocessor.*** ***Anything that keeps solenoid feedback voltage high when the solenoid is supposed to be energized.***	**Shorted Solenoid Driver** FAULT DETECTION CONDITIONS: Vehicle battery voltage is applied to the high side of the solenoid coils in the ECU assembly by the power switch. The solenoids are energized using a field effect transistor (FET) to connect the low side of the coil to ground. Whenever the power switch is closed and the driver transistor is not turned on (solenoid commanded off) the feedback voltage should be high. If the solenoid feedback voltage is measured on an A/D pin and the voltage measured is less than 43 % of the detected battery voltage for 30 msec, a shorted solenoid driver fault is indicated. The on/off threshold is different if the solenoid feedback is measured on a GIO pin (see TMS 470 spec. sheet). Feedback is continuously monitored and compared to the requested valve solenoid state (on/off).	30 msec	Ignition latched	EBD: R2 ABS: R2 TC: R2 YSC: R2 HBA: R2 EDTR: R0 Brake AC:R2 HA : R2 ITPM :R0	**Display:** **PFV:** No	These solenoids are not available in ABS only units.
4003 [TC-ISO 2]	13								
4002 [–TC Supply1]	13								
4004 [TC Supply2]	13								

PROPRIETARY NOTICE: This document is copyright and the property of TRW Automotive Inc. It is disclosed in confidence. It may not be copied (in whole or in part), disclosed to others or used for manufacturing, without the prior written consent of TRW Automotive Inc.
© TRW Automotive Inc. 2006

5.2.3 Leaky Driver Fault

DTC Code	Fault symptom	Condition for recog-nition	Reason for fault	Detection rules	Detection time	Latch type	System response	Driver notification -------- PFV (Yes/No)	Remarks
5210 [ISO LF]	01	Power ON, Continuous Failsafing as long as sysmte voltage greater than 3V	***-Intermittent coil activation due to components fail-ure in the circuit.*** ***- FET in linear region*** ***- Floating Gate (FET)***	**Leaky Solenoid Driver** If during the current ignition cycle an open fault and a shorted fault are latched or prior fault validation then a leaky driver fault will be latched. Latched LEAKY_DRIVER = (SOL_SHORT Latched OR PFV) AND (SOL_OPEN Latched OR PFV) The leaky driver fault will be cleared when the open fault and shorted fault are no longer latched or prior fault valida-tion. Clear LEAKY_DRIVER = (SOL_SHORT Not Latched AND Not PFV) OR (SOL_OPEN Not Latched AND Not PFV) It may take up to two ignition cycles to clear the LEAKY_DRIVER due to the Prior Fault validation of the Open or Shorted Faults.	Immediately	Ignition latched	EBD: R2 ABS: R2 TC: R2 YSC: R2 HBA: R2 EDTR: R0 Brake AC:R2 HA : R2 ITPM :R0	**Display:** **PFV:** No	None
5210 [ISO RF]	01								
5210 [ISO LR]	01								
5210 [ISO RR]	01								
5210 [Dump LF]	01								
5210 [Dump RF]	01								
5210 [Dump LR]	01								
5210 [Dump RR]	01								

(Only use for ESC)

PROPRIETARY NOTICE: This document is copyright and the property of TRW Automotive Inc. It is disclosed in confidence. It may not be copied (in whole or in part), disclosed to others or used for manufacturing, without the prior written consent of TRW Automotive Inc.
© TRW Automotive Inc. 2006

DTC Code	Fault symptom	Condition for recog-nition	Reason for fault	Detection rules	Detection time	Latch type	System response	Driver notification -------- PFV(Yes/No)	Remarks
5210 [TC ISO1]	01	Power ON, Continuous Failsafing as long as sysmte voltage is greater than 3V	***-Intermittent coil activation due to components fail-ure in the circuit.*** ***- FET in linear region*** ***- Floating Gate (FET)***	**Leaky Solenoid Driver** If during the current ignition cycle an open fault and a shorted fault are latched or prior fault validation then a leaky driver fault will be latched. Latched LEAKY_DRIVER = (SOL_SHORT Latched OR PFV) AND (SOL_OPEN Latched OR PFV) The leaky driver fault will be cleared when the open fault and shorted fault are no longer latched or prior fault valida-tion. Clear LEAKY_DRIVER = (SOL_SHORT Not Latched AND Not PFV) OR (SOL_OPEN Not Latched AND Not PFV) It may take up to two ignition cycles to clear the LEAKY_DRIVER due to the Prior Fault validation of the Open or Shorted Faults.	Immediately	Ignition latched	EBD: R2 ABS: R2 TC: R2 YSC: R2 HBA: R2 EDTR: R0 Brake AC:R2 HA : R2 ITPM :R0	**Display:** **PFV:** No	These solenoids are not available in ABS only units.
5210 [TC ISO2]	01								
5210 [TC SUP-PLY1]	01								
5210 [TC SUP-PLY2]	01								

PROPRIETARY NOTICE: This document is copyright and the property of TRW Automotive Inc. It is disclosed in confidence. It may not be copied (in whole or in part), disclosed to others or used for manufacturing, without the prior written consent of TRW Automotive Inc.
© TRW Automotive Inc. 2006

5.2.4 Shorted solenoid

DTC Code	Fault symptom	Condition for recognition	Reason for fault	Detection rules	Detection time	Latch type	System response	Driver notification -------- PFV (Yes/No)	Remarks
4010 [Iso Front Left]	13	Power ON, Continuous Failsafing as long as sysmte voltage greater than 3V	***-Defective solenoid driver FET.*** ***- Defective printed circuit board.*** ***- Defective microprocessor.*** ***- Anything that keeps solenoid feedback voltage high when the solenoid is supposed to be energized.***	**Shorted solenoid** Vehicle battery voltage is applied to the high side of the solenoid coils in the ECU assembly by the power switch. The solenoids are energized using a field effect transistor (FET) to connect the low side of the coil to ground. Whenever the power switch is closed and the driver transistor is turned on (solenoid commanded on) the feedback voltage should be low. If the solenoid feedback voltage is measured on an A/D pin and the voltage measured is greater than 1 volt for 15 msec, a shorted solenoid fault is indicated. The on/off threshold is different if the solenoid feedback is measured on a GIO pin (see TMS 570 spec. sheet). Notice: For this test the FET must energized with test pulses. To prevent electromagnetic compatibility (EMV) issues with a gap of 5 sec the solenoids are check one after the other. **Solenoid Failsafe Monitoring Range : The system Voltage should be greater than 3V.**	15 msec (only if in test pulse loop, otherwise up to 60 sec)	Ignition latched	EBD: R0 ABS: R1 TC: R1 YSC: R2 HBA: R2 EDTR: R0 Brake AC:R0 HA : R2 ITPM :R0	**Display:** **PFV:** No	None
4014 [Iso Front Right]	13								

PROPRIETARY NOTICE: This document is copyright and the property of TRW Automotive Inc. It is disclosed in confidence. It may not be copied (in whole or in part), disclosed to others or used for manufacturing, without the prior written consent of TRW Automotive Inc.
© TRW Automotive Inc. 2006

DTC Code	Fault symptom	Condition for recog-nition	Reason for fault	Detection rules	Detection time	Latch type	System response	Driver notification -------- PFV(Yes/No)	Remarks
4018 [Iso Rear Left]	13	Power ON, Continuous Failsafing as long as sysmte voltage is greater than 3V	***- Defective solenoid driver FET.*** ***- Defective printed circuit board.*** ***- Defective microprocessor.*** ***- Anything that keeps solenoid feedback voltage high when the solenoid is supposed to be energized.***	**Shorted solenoid** Vehicle battery voltage is applied to the high side of the solenoid coils in the ECU assembly by the power switch. The solenoids are energized using a field effect transistor (FET) to connect the low side of the coil to ground. Whenever the power switch is closed and the driver transistor is turned on (solenoid commanded on) the feedback voltage should be low. If the solenoid feedback voltage is measured on an A/D pin and the voltage measured is greater than 1 volt for 15 msec, a shorted solenoid fault is indicated. The on/off threshold is different if the solenoid feedback is measured on a GIO pin (see TMS 570 spec. sheet). Notice: For this test the FET must energized with test pulses. To prevent electromagnetic compatibility (EMV) issues with a gap of 5 sec the solenoids are check one after the other. **Solenoid Failsafe Monitoring Range : The system Voltage should be greater than 3V.**	15 msec (only if in test pulse loop, otherwise up to 60 sec)	Ignition latched	EBD: R2 ABS: R2 TC: R1 YSC: R2 HBA: R2 EDTR: R0 Brake AC:R0 HA : R2 ITPM :R0	**Display:** **PFV:** No	None
401C [ISo Rear Right]	13								

PROPRIETARY NOTICE: This document is copyright and the property of TRW Automotive Inc. It is disclosed in confidence. It may not be copied (in whole or in part), disclosed to others or used for manufacturing, without the prior written consent of TRW Automotive Inc.
© TRW Automotive Inc. 2006

DTC Code	Fault symptom	Condition for recog-nition	Reason for fault	Detection rules	Detection time	Latch type	System response	Driver notification -------- PFV (Yes/No)	Remarks
4011 [DumpFront Left]	13	Power ON, Continuous Failsafing as long as sysmte voltage is greater than 3V	***- Defective solenoid driver FET.*** ***- Defective printed circuit board.*** ***- Defective microprocessor.*** ***- Anything that keeps solenoid feedback voltage high when the solenoid is supposed to be energized.***	**Shorted solenoid** Vehicle battery voltage is applied to the high side of the solenoid coils in the ECU assembly by the power switch. The solenoids are energized using a field effect transistor (FET) to connect the low side of the coil to ground. Whenever the power switch is closed and the driver transistor is turned on (solenoid commanded on) the feedback voltage should be low. If the solenoid feedback voltage is measured on an A/D pin and the voltage measured is greater than I volt for 15 msec, a shorted solenoid fault is indicated. The on/off threshold is different if the solenoid feedback is measured on a GIO pin (see TMS 570 spec. sheet). Notice: For this test the FET must energized with test pulses. To prevent electromagnetic compatibility (EMV) issues with a gap of 5 sec the solenoids are check one after the other. **Solenoid Failsafe Monitoring Range : The system Voltage should be greater than 3V.**	15 msec (only if in test pulse loop, otherwise up to 60 sec)	Ignition latched	EBD: R0 ABS: R1 TC: R1 YSC: R2 HBA: R2 EDTR: R0 Brake AC:R0 HA : R2 ITPM :R0	**Display:** **PFV:** No	None
4015 [DumpFront Right]	13								

PROPRIETARY NOTICE: This document is copyright and the property of TRW Automotive Inc. It is disclosed in confidence. It may not be copied (in whole or in part), disclosed to others or used for manufacturing, without the prior written consent of TRW Automotive Inc.
© TRW Automotive Inc. 2006

DTC Code	Fault symptom	Condition for recog-nition	Reason for fault	Detection rules	Detection time	Latch type	System response	Driver notification -------- PFV (Yes/No)	Remarks
4019 [Dump Rear Left]	13	Power ON, Continuous Failsafing as long as sysmte voltage is greater than 3V	***- Defective sole-noid driver FET.*** ***- Defective printed circuit board.*** ***- Defective micro-processor.*** ***- Anything that keeps solenoid feedback voltage high when the solenoid is sup-posed to be ener-gized.***	**Shorted solenoid** Vehicle battery voltage is applied to the high side of the solenoid coils in the ECU assembly by the power switch. The solenoids are energized using a field effect transistor (FET) to connect the low side of the coil to ground. When-ever the power switch is closed and the driver transistor is turned on (solenoid commanded on) the feedback voltage should be low. If the solenoid feedback voltage is meas-ured on an A/D pin and the voltage measured is greater than I volt for 15 msec, a shorted solenoid fault is indi-cated. The on/off threshold is different if the solenoid feed-back is measured on a GIO pin (see TMS 570 spec. sheet). Notice: For this test the FET must energized with test pulses. To prevent electromagnetic compatibility (EMV) issues with a gap of 5 sec the solenoids are check one after the other. **Solenoid Failsafe Monitoring Range : The system Vol-tage should be greater than 3V.**	15 msec (only if in test pulse loop, otherwise up to 60 sec)	Ignition latched	EBD: R1 ABS: R2 TC: R1 YSC: R2 HBA: R2 EDTR: R0 Brake AC:R0 HA : R2 ITPM :R0	**Display:** **PFV:** No	None
401D [Dump Rear Right]	13								

PROPRIETARY NOTICE: This document is copyright and the property of TRW Automotive Inc. It is disclosed in confidence. It may not be copied (in whole or in part), disclosed to others or used for manufacturing, without the prior written consent of TRW Automotive Inc.
© TRW Automotive Inc. 2006

(Only use for ESC)

DTC Code	Fault symptom	Condition for recognition	Reason for fault	Detection rules	Detection time	Latch type	System response	Driver notification -------- PFV (Yes/No)	Remarks
4001 [TC ISO 1]	13	Power ON, Continuous Failsafing as long as sysmte voltage is greater than 3V	***-Defective solenoid driver FET.*** ***-Defective printed circuit board.*** ***- Defective microprocessor.*** ***- Anything that keeps solenoid feedback voltage high when the solenoid is supposed to be energized.***	**Shorted solenoid** Vehicle battery voltage is applied to the high side of the solenoid coils in the ECU assembly by the power switch. The solenoids are energized using a field effect transistor (FET) to connect the low side of the coil to ground. Whenever the power switch is closed and the driver transistor is turned on (solenoid commanded on) the feedback voltage should be low. If the solenoid feedback voltage is measured on an A/D pin and the voltage measured is greater than I volt for 15 msec, a shorted solenoid fault is indicated. The on/off threshold is different if the solenoid feedback is measured on a GIO pin (see TMS 570 spec. sheet). Notice: For this test the FET must energized with test pulses. To prevent electromagnetic compatibility (EMV) issues with a gap of 5 sec the solenoids are check one after the other. **Solenoid Failsafe Monitoring Range : The system Voltage should be greater than 3V.**	15 msec (only if in test pulse loop, otherwise up to 60 sec)	Ignition latched	EBD: R0 ABS: R0 TC: R1 YSC: R2 HBA: R2 EDTR: R0 Brake AC:R0 (for supply Brake AC :R1) HA : R2 ITPM :R0	**Display:** **PFV:** No	These solenoids are not available in ABS only units.
4003 [TC ISO 2]	13								
4002 [Supply 1]	13								
4004 [Supply 2]	13								

PROPRIETARY NOTICE: This document is copyright and the property of TRW Automotive Inc. It is disclosed in confidence. It may not be copied (in whole or in part), disclosed to others or used for manufacturing, without the prior written consent of TRW Automotive Inc.
© TRW Automotive Inc. 2006

5.2.5 Solenoid Overtemperature

DTC Code	Fault symptom	Condition for recog-nition	Reason for fault	Detection rules	Detection time	Latch type	System response	Driver notification -------- PFV(Yes/No)	Remarks
4013 [Iso Front Left]	4B	Power ON, Continuous Failsafing	***-Frequent slip control events.*** ***-Anything that causes the sole-noid to be active for a long period of time.***	**Solenoid Over Temperature** At power up the solenoids are set to the maximum of the ambient temperature as reported by the MIRAM ASIC. The temperature estimation updates one solenoid every 5 msec. The estimation is increased for time that the soleno-id is on and decreased when the solenoid is off. If the es-timation goes above the max temperature threshold then the fault is set. Once set, the fault will remain until the temperature falls below a second threshold. This is for debouncing purpos-es. SOLENOID_DISABLE_TEMPERATURE 270 °C SOLENOID_REENABLE_TEMPERATURE 150 °C.	Depends on calculated solenoid temperature and driving conditions.	Condition latched	EBD: R0 ABS: R1 TC: R2 YSC: R2 HBA: R2 EDTR: R0 Brake AC:R0 HA : R2 ITPM :R0	**Display:** **PFV:** No	None
4013 [Iso Front Right]	4B								

PROPRIETARY NOTICE: This document is copyright and the property of TRW Automotive Inc. It is disclosed in confidence. It may not be copied (in whole or in part), disclosed to others or used for manufacturing, without the prior written consent of TRW Automotive Inc.
© TRW Automotive Inc. 2006

DTC Code	Fault symptom	Condition for recog-nition	Reason for fault	Detection rules	Detection time	Latch type	System response	Driver notification -------- PFV (Yes/No)	Remarks
4013 [Iso Rear Left]	4B	Power ON, Continuous Failsafing	***-Frequent slip control events.*** ***-Anything that causes the sole-noid to be active for a long period of time.***	**Solenoid Over Temperature** At power up the solenoids are set to the maximum of the ambient temperature as reported by the MIRAM ASIC. The temperature estimation updates one solenoid every 5 msec. The estimation is increased for time that the soleno-id is on and decreased when the solenoid is off. If the es-timation goes above the max temperature threshold then the fault is set. Once set, the fault will remain until the temperature falls below a second threshold. This is for debouncing purpos-es. SOLENOID_DISABLE_TEMPERATURE 270 °C SOLENOID_REENABLE_TEMPERATURE 150 °C.	Depends on calculated solenoid temperature and driving conditions.	Condition latched	EBD: R2 ABS: R2 TC: R2 YSC: R2 HBA: R2 EDTR: R0 Brake AC:R0 HA : R2 ITPM :R0	**Display:** **PFV:** No	
4013 [Iso Rear Right]	4B								

PROPRIETARY NOTICE: This document is copyright and the property of TRW Automotive Inc. It is disclosed in confidence. It may not be copied (in whole or in part), disclosed to others or used for manufacturing, without the prior written consent of TRW Automotive Inc.
© TRW Automotive Inc. 2006

DTC Code	Fault symptom	Condition for recog-nition	Reason for fault	Detection rules	Detection time	Latch type	System response	Driver notification -------- PFV (Yes/No)		Remarks
4013 [TC_ISO1]	4B	Power ON, Continuous Failsafing	***-Frequent slip control events.*** ***-Anything that causes the sole-noid to be active for a long period of time.***	**Solenoid Over Temperature** At power up the solenoids are set to the maximum of the ambient temperature as reported by the System ASIC or the solenoid temperature reading stored in NVRAM from the last ignition cycle. The temperature estimation updates one solenoid every 5 msec. The estimation is increased for time that the solenoid is on and decreased when the sole-noid is off. If the estimation goes above the max temperature thre-shold of 270 degrees C then the fault is set.Once set, the fault will remain until the temperature falls below a second threshold of 150 degrees C. This is for debouncing pur-poses.	Depends on calculated solenoid temperature and driving conditions.	Condition latched	EBD: R0 ABS: R0 TC: R2 YSC: R2 HBA: R2 EDTR: R0 Brake AC:R0 HA : R2 ITPM :R0	**Display:** **PFV:** No		
4013 [TC ISO2]	4B									

PROPRIETARY NOTICE: This document is copyright and the property of TRW Automotive Inc. It is disclosed in confidence. It may not be copied (in whole or in part), disclosed to others or used for manufacturing, without the prior written consent of TRW Automotive Inc.
© TRW Automotive Inc. 2006

DTC Code	Fault symptom	Condition for recog-nition	Reason for fault	Detection rules	Detection time	Latch type	System response	Driver notification -------- PFV (Yes/No)	Remarks
4013 [Dump-Front Left]	4B	Power ON, Continuous Failsafing	***-Frequent slip control events.*** ***-Anything that causes the sole-noid to be active for a long period of time.***	**Solenoid Over Temperature** At power up the solenoids are set to the maximum of the ambient temperature as reported by the System ASIC or the solenoid temperature reading stored in NVRAM from the last ignition cycle. The temperature estimation updates one solenoid every 5 msec. The estimation is increased for time that the solenoid is on and decreased when the sole-noid is off. If the estimation goes above the max temperature thre-shold of 270 degrees C then the fault is set. Once set, the fault will remain until the temperature falls below a second threshold of 150 degrees C. This is for debouncing purposes.	Depends on calculated solenoid temperature and driving conditions.	Condition latched	EBD: R0 ABS: R1 TC: R2 YSC: R2 HBA: R2 EDTR: R0 Brake AC:R0 HA : R2 ITPM :R0	**Display:** **PFV:** No	
4013 [Dump-Front Right]	4B								

PROPRIETARY NOTICE: This document is copyright and the property of TRW Automotive Inc. It is disclosed in confidence. It may not be copied (in whole or in part), disclosed to others or used for manufacturing, without the prior written consent of TRW Automotive Inc.
© TRW Automotive Inc. 2006

DTC Code	Fault symptom	Condition for recog-nition	Reason for fault	Detection rules	Detection time	Latch type	System response	Driver notification -------- PFV (Yes/No)	Remarks
4013 [Dump-Rear Left]	4B	Power ON, Continuous Failsafing	***-Frequent slip control events.*** ***-Anything that causes the sole-noid to be active for a long period of time.***	**Solenoid Over Temperature** At power up the solenoids are set to the maximum of the ambient temperature as reported by the System ASIC or the solenoid temperature reading stored in NVRAM from the last ignition cycle. The temperature estimation updates one solenoid every 5 msec. The estimation is increased for time that the solenoid is on and decreased when the solenoid is off. If the estimation goes above the max temperature thre-shold of 270 degrees C then the fault is set. Once set, the fault will remain until the temperature falls below a second threshold of 150 degrees C. This is for debouncing purposes.	Depends on calculated solenoid temperature and driving conditions.	Condition latched	EBD: R0 ABS: R2 TC: R2 YSC: R2 HBA: R2 EDTR: R0 Brake AC:R0 HA : R2 ITPM :R0	**Display:** **PFV:** No	
4013 [Dump-Rear Right]	4B								

(Only use for ESC)

PROPRIETARY NOTICE: This document is copyright and the property of TRW Automotive Inc. It is disclosed in confidence. It may not be copied (in whole or in part), disclosed to others or used for manufacturing, without the prior written consent of TRW Automotive Inc.
© TRW Automotive Inc. 2006

DTC Code	Fault symptom	Condition for recog-nition	Reason for fault	Detection rules	Detection time	Latch type	System response	Driver notification -------- PFV (Yes/No)	Remarks
4013 [TC Sup-ply1]	4B	Power ON, Continuous Failsafing	***-Frequent slip control events.*** ***-Anything that causes the sole-noid to be active for a long period of time.***	**Solenoid Over Temperature** At power up the solenoids are set to the maximum of the ambient temperature as reported by the System ASIC or the solenoid temperature reading stored in NVRAM from the last ignition cycle. The temperature estimation updates one solenoid every 5 msec. The estimation is increased for time that the solenoid is on and decreased when the solenoid is off. If the estimation goes above the max temperature thre-shold of 270 degrees C then the fault is set. Once set, the fault will remain until the temperature falls below a second threshold of 150 degrees C. This is for debouncing purposes.	Depends on calculated solenoid temperature and driving conditions.	Condition latched	EBD: R0 ABS: R0 TC: R2 YSC: R2 HBA: R2 EDTR: R0 Brake Ac: R1 HA : R2 ITPM :R0	**Display:** **PFV:** No	These solenoids are not available in ABS only units.
4013 [TC Sup-ply2]	4B								

PROPRIETARY NOTICE: This document is copyright and the property of TRW Automotive Inc. It is disclosed in confidence. It may not be copied (in whole or in part), disclosed to others or used for manufacturing, without the prior written consent of TRW Automotive Inc.
© TRW Automotive Inc. 2006

5.2.6 Leaky Driver of Unknown Coil (Only use for ESC)

DTC Code	Fault symptom	Condition for recog-nition	Reason for fault	Detection rules	Detection time	Latch type	System response	Driver notification -------- PFV(Yes/No)	Remarks
5200	01	Power ON, Continuous Failsafing	***-Defective Sole-noid Driver***	**Leaky Driver Of Unknown Coil** The SSR is turned off in system self test at startup and after clear DTCs. After turning off the SSR, the discharging of the capacitor behind the SSR is monitored. If the leakage current is too high, the voltage feedback does not fit into the given ranges and the failure is set.	Immediate	Ignition latched	EBD: R2 ABS: R2 TC: R1 YSC: R2 HBA: R2 EDTR: R0 Brake AC:R2 HA : R2 ITPM :R0	**Display:** **PFV:** No	None

PROPRIETARY NOTICE: This document is copyright and the property of TRW Automotive Inc. It is disclosed in confidence. It may not be copied (in whole or in part), disclosed to others or used for manufacturing, without the prior written consent of TRW Automotive Inc.
© TRW Automotive Inc. 2006

5.2.7 Missing fly back diode (Only use for ESC)

DTC Code	Fault symptom	Condition for recog-nition	Reason for fault	Detection rules	Detection time	Latch type	System response	Driver notification -------- PFV(Yes/No)	Remarks
FFFF	FF	Power ON, Continuous Failsafing	***-Fly back diode is missing in the solenoid***	This fault will be detected if the duty cycle is less than 100% and fly back diode is missing in the solenoid	-	Ignition latched	EBD: R2 ABS: R2 TC: R2 YSC: R2 HBA: R2 EDTR: R0 Brake AC:R1 HA : R2 ITPM :R0	**Display:** **PFV:** No	None

PROPRIETARY NOTICE: This document is copyright and the property of TRW Automotive Inc. It is disclosed in confidence. It may not be copied (in whole or in part), disclosed to others or used for manufacturing, without the prior written consent of TRW Automotive Inc.
© TRW Automotive Inc. 2006

5.2.8 Loss Of Solenoid Ground In The Wiring Harness

DTC Code	Fault symptom	Condition for recog-nition	Reason for fault	Detection rules	Detection time	Latch type	System response	Driver notification -------- PFV (Yes/No)	Remarks
5100	00	Power ON, Continuous Failsafing	***-Defective wire harness to GND valves*** ***-Defective printed circuit board***	**Loss Of Solenoid Ground In The Wiring Harness** If there is a ground shift between pump motor ground and valve ground (because of loss ground valve) this is detected via the ground shift monitoring circuitry.	20 msec	Condition latched	EBD: R0 ABS: R2 TC: R2 YSC: R2 HBA: R2 EDTR: R0 Brake AC:R0 HA : R2 ITPM :R0	**Display:** **PFV:** No	None

PROPRIETARY NOTICE: This document is copyright and the property of TRW Automotive Inc. It is disclosed in confidence. It may not be copied (in whole or in part), disclosed to others or used for manufacturing, without the prior written consent of TRW Automotive Inc.
© TRW Automotive Inc. 2006

5.3 Pump Motor Faults

5.3.1 ABS Open Pump Motor

DTC Code	Fault symptom	Condition for recog-nition	Reason for fault	Detection rules	Detection time	Latch type	System response	Driver notification -------- PFV (Yes/No)	Remarks
4020	13	Power ON, Continuous Failsafing and Targest speed request is zero	***-Defective motor (open motor winding).*** ***- Defective wiring harness (Motor GND connection).*** ***-Defective motor driver (always on).*** ***-Defective printed circuit board (feedback shorted high).***	**ABS Open Pump Motor** The pump motor is checked for an open circuit when no motor speed request is active and the motor is switched OFF. If the pump motor feedback remains above 1 V for more than 1000 msec, then the fault is set.	1000msec	Ignition latched	EBD: R0 ABS: R2 TC: R1 YSC: R2 HBA: R2 EDTR: R0 Brake AC:R1 HA : R0 ITPM :R0	**Display:** **PFV:** Yes	None

PROPRIETARY NOTICE: This document is copyright and the property of TRW Automotive Inc. It is disclosed in confidence. It may not be copied (in whole or in part), disclosed to others or used for manufacturing, without the prior written consent of TRW Automotive Inc.
© TRW Automotive Inc. 2006

5.3.2 ABS Pump Motor Driver Open

DTC Code	Fault symptom	Condition for recog-nition	Reason for fault	Detection rules	Detection time	Latch type	System response	Driver notification -------- PFV (Yes/No)	Remarks
4020	13	Ignition On, Motor speed request pending (Motor Self Test or regular motor speed request)	***Defective motor driver.***	**ABS Pump Motor Driver Open** The motor feedback on the high side of the motor is monitored every 1 msec when the motor is commanded on, either during the initial motor self test or during normal speed control. If the motor feedback voltage is below 1V and a locked motor was detected the open driver fault will be set. The reason for the locked motor is a not working motor driver. The locked motor DTC will be suppressed. During Ignition Voltage Excessive High and Excessive Low, all wheel speed signals will be invalid. Due to this the speed will not get updated and pump motor cannot be activated and so driver open fault monitor will not run and corresponding fault will not get detected.	150ms	Ignition latched	EBD: R0 ABS: R2 TC: R1 YSC: R2 HBA: R2 EDTR: R0 Brake AC:R1 HA : R0 ITPM :R0	**Display:** **PFV:** Yes	None

PROPRIETARY NOTICE: This document is copyright and the property of TRW Automotive Inc. It is disclosed in confidence. It may not be copied (in whole or in part), disclosed to others or used for manufacturing, without the prior written consent of TRW Automotive Inc.
© TRW Automotive Inc. 2006

5.3.3 ABS Pump Motor Supply Open

DTC Code	Fault symptom	Condition for recog-nition	Reason for fault	Detection rules	Detection time	Latch type	System response	Driver notification -------- PFV (Yes/No)	Remarks
4020	13	Ignition On,Continuous Failsafe	***-Blown or re-moved motor supply fuse -Faulty wiring harness (motor supply from bat-tery)***	**ABS Pump Motor Supply Open** The motor supply voltage is monitored every 5 msec. If the motor supply voltage level is below 4,5V for more than 150 msec, then the fault will be set.	150msec	Condition latched	EBD: R0 ABS: R2 TC: R1 YSC: R2 HBA: R2 EDTR: R0 Brake AC:R1 HA : R0 ITPM :R0	**Display:** **PFV:** Yes	None

PROPRIETARY NOTICE: This document is copyright and the property of TRW Automotive Inc. It is disclosed in confidence. It may not be copied (in whole or in part), disclosed to others or used for manufacturing, without the prior written consent of TRW Automotive Inc.
© TRW Automotive Inc. 2006

5.3.4 ABS Locked Pump Motor

DTC Code	Fault symptom	Condition for recog-nition	Reason for fault	Detection rules	Detection time	Latch type	System response	Driver notification -------- PFV (Yes/No)	Remarks
4020	13	Ignition On, Motor self test requested or target speed request active	***-Defective motor (locked/seized).*** ***-Bad motor con-nection.*** ***- Defective printed circuit board (feedback line open).*** ***- Anything that keeps motor feedback voltage low when it is expected to be driven high by back-EMF across the rotor winding of the coasting motor.***	**A) Initial motor self test:** To check if the motor is able to work a target speed request will be commanded after the mode manager has triggered a motor self test. The test starts with the first step (Target 601rpm) The controller calculates a motor on time request depending on the current conditions. If the motor speed is higher than the related threshold value (1. step 500rpm) the routine starts to integrate the measured speed signal. If the value is higher than the reference value (1. step: 7000rpm) the test is passed. Otherwise a 2. and 3. step will follow. 2. step: Target: 902 rpm. Switch off threshold: 800rpm Reference integral: 9000rpm. 3. step: Target: 6003 rpm. Switch off threshold: 2500rpm Reference integral: 10000rpm. If the 3. step was not successful and no open driver was de-tected the fault is set. **B) Locked motor monitor during normal control:** The motor feedback will be evaluated after every motor on request. If the speed is lower than 50rpm a motor locked flag will be set. If the flag is active for more than 200ms the fault is set. During Ignition Voltage Excessive High and Excessive Low, all wheel speed signals will be invalid. Due to this the speed will not get updated and pump motor cannot be activated and so locked pump fault monitor will not run and corresponding fault will not get detected.	A: ~900 msec; B: ~200 msec	Ignition latched	EBD: R0 ABS: R2 TC: R1 YSC: R2 HBA: R2 EDTR: R0 Brake AC:R1 HA : R0 ITPM :R0	**Display:** **PFV:** Yes	None

PROPRIETARY NOTICE: This document is copyright and the property of TRW Automotive Inc. It is disclosed in confidence. It may not be copied (in whole or in part), disclosed to others or used for manufacturing, without the prior written consent of TRW Automotive Inc.
© TRW Automotive Inc. 2006

5.4 Microcontroller Faults

5.4.1 LOGICAL_SEQUENCE_FAULT_R4 (Only use for ESC)

DTC Code	Fault symptom	Condition for recog-nition	Reason for fault	Detection rules	Detection time	Latch type	System response	Driver notification -------- PFV(Yes/No)	Remarks
510A	00	Ignition On, Continuous Failsafe	***-R4 LSM se-quence failed*** ***-R4 LSM cyclic self test failed***	**LOGICAL_SEQUENCE_FAULT_R4** R4 LSM module compares the counter of the current task with the required counter defined in se-quence.If the sequence mismatch occur then the fault need to be logged. The fault should be logged if the cyclic R4 LSM self test fails due to self test timer 5000ms expires	Immediate	Ignition latched	EBD: R2 ABS: R2 TC: R2 YSC: R2 HBA: R2 EDTR: R2 Brake AC:R2 HA : R2 ITPM :R2	**Display:** **PFV:** No	None

PROPRIETARY NOTICE: This document is copyright and the property of TRW Automotive Inc. It is disclosed in confidence. It may not be copied (in whole or in part), disclosed to others or used for manufacturing, without the prior written consent of TRW Automotive Inc.
© TRW Automotive Inc. 2006

5.4.2 LOGICAL_SEQUENCE_FAULT_M3 (Only use for ESC)

DTC Code	Fault symptom	Condition for recog-nition	Reason for fault	Detection rules	Detection time	Latch type	System response	Driver notification -------- PFV(Yes/No)	Remarks
510A	00	Ignition On, Continuous Failsafe	***-M3 LSM se-quence failed*** ***-M3 LSM cyclic self test failed***	**LOGICAL_SEQUENCE_FAULT_M3** M3 LSM module compares the counter of the current task with the required counter defined in se-quence.If the sequence mismatch occur then the fault need to be logged. The fault should be logged if the cyclic M3 LSM self test fails due to self test timer 5000ms expires	Immediate	Ignition latched	EBD: R2 ABS: R2 TC: R2 YSC: R2 HBA: R2 EDTR: R2 Brake AC:R2 HA : R2 ITPM :R2	**Display:** **PFV:** No	None

PROPRIETARY NOTICE: This document is copyright and the property of TRW Automotive Inc. It is disclosed in confidence. It may not be copied (in whole or in part), disclosed to others or used for manufacturing, without the prior written consent of TRW Automotive Inc.
© TRW Automotive Inc. 2006

5.4.3 LBIST (CPU) Fault R4 (Only use for ESC)

DTC Code	Fault symptom	Condition for recog-nition	Reason for fault	Detection rules	Detection time	Latch type	System response	Driver notification -------- PFV(Yes/No)	Remarks
510A	00	Ignition On, Continuous Failsafe	***Defective micro-processor*** ***- LBIST self test failed*** **- LBIST run on CPU R4 failed**	**LBIST R4 Fault:** The LBIST will be executed during start up and during run-time. If one CPU interval fails, the LBIST driver will retry to execute all intervals and if this will fail too, a fault is set. To ensure that the LBIST peripheral is working, a self test is executed before executing any interval. This test will check if the LBIST timeout will stop the Self Test Controller (STC) in case that the LBIST interval will stuck for some reason.	Immediate	Ignition latched	EBD: R2 ABS: R2 TC: R2 YSC: R2 HBA: R2 EDTR: R2 Brake AC:R2 HA : R2 ITPM :R2	**Display:** **PFV:** No	None

PROPRIETARY NOTICE: This document is copyright and the property of TRW Automotive Inc. It is disclosed in confidence. It may not be copied (in whole or in part), disclosed to others or used for manufacturing, without the prior written consent of TRW Automotive Inc.
© TRW Automotive Inc. 2006

5.4.4 LBIST (CPU) Fault M3

DTC Code	Fault symptom	Condition for recog-nition	Reason for fault	Detection rules	Detection time	Latch type	System response	Driver notification -------- PFV(Yes/No)	Remarks
510A	00	Ignition On, Continuous Failsafe	***Defective micro-processor*** ***- LBIST self test failed*** **- LBIST run on CPU M3 failed**	**LBIST M3 Fault:** The LBIST will be executed during start up and during run-time. If one CPU interval fails, the LBIST driver will retry to execute all intervals and if this will fail too, a fault is set. To ensure that the LBIST peripheral is working, a self test is executed before executing any interval. This test will check if the LBIST timeout will stop the Self Test Controller (STC) in case that the LBIST interval will stuck for some reason.	Immediate	Ignition latched	EBD: R2 ABS: R2 TC: R2 YSC: R2 HBA: R2 EDTR: R2 Brake AC:R2 HA : R2 ITPM :R2	**Display:** **PFV:** No	None

PROPRIETARY NOTICE: This document is copyright and the property of TRW Automotive Inc. It is disclosed in confidence. It may not be copied (in whole or in part), disclosed to others or used for manufacturing, without the prior written consent of TRW Automotive Inc.
© TRW Automotive Inc. 2006

5.4.5 Mismatch MISR R4 Fault (Only use for ESC)

DTC Code	Fault symp-tom	Condition for recognition	Reason for fault	Detection rules	Detection time	Latch type	System response	Driver notification -------- PFV (Yes/No)	Remarks
510A	00	Ignition On, Continuous Failsafe	***Received MISR values from other core do not match stored ROM values or MISR values are not received***	**R4 MISR Fault:** LBIST MISR compare failed After executing the lbist on one core the MISR values of an interval are sent to the other CORE. The received values are compared with the stored ROM values. In case of a mismatch a fault is detected.	10msecs	Ignition latched	EBD: R2 ABS: R2 TC: R2 YSC: R2 HBA: R2 EDTR: R2 Brake AC:R2 HA : R2 ITPM :R2	**Display:** **PFV:** No	None

PROPRIETARY NOTICE: This document is copyright and the property of TRW Automotive Inc. It is disclosed in confidence. It may not be copied (in whole or in part), disclosed to others or used for manufacturing, without the prior written consent of TRW Automotive Inc.
© TRW Automotive Inc. 2006

5.4.6 Mismatch MISR M3 Fault (Only use for ESC)

DTC Code	Fault symptom	Condition for recog-nition	Reason for fault	Detection rules	Detection time	Latch type	System response	Driver notification -------- PFV (Yes/No)	Remarks
510A	00	Ignition On, Continuous Failsafe	***Received MISR values from other core do not match stored ROM values or MISR values are not received***	**M3 MISR Fault:** LBIST MISR compare failed After executing the lbist on one core the MISR values of an interval are sent to the other CORE. The received values are compared with the stored ROM values. In case of a mismatch a fault is detected.	10msecs	Ignition latched	EBD: R2 ABS: R2 TC: R2 YSC: R2 HBA: R2 EDTR: R2 Brake AC:R2 HA : R2 ITPM :R2	**Display:** **PFV:** No	None

PROPRIETARY NOTICE: This document is copyright and the property of TRW Automotive Inc. It is disclosed in confidence. It may not be copied (in whole or in part), disclosed to others or used for manufacturing, without the prior written consent of TRW Automotive Inc.
© TRW Automotive Inc. 2006

5.4.7 Dual Clock Compare Fault (Only use for ESC)

DTC Code	Fault symptom	Condition for recog-nition	Reason for fault	Detection rules	Detection time	Latch type	System response	Driver notification -------- PFV (Yes/No)	Remarks
510A	00	Ignition On, Continuous Failsafe	***- Clock frequency of one clock source is out of range.*** ***-DCC module is not working as expected***	**Dual Clock Compare Fault:** The Dual Clock Compare determines if one clock source is out of range. The standard configuration is 1% deviation which is 80 kHz at 8MHz clock input. The DCC module will also execute two self tests to ensure the peripheral is working as expected. This is done by manipulat-ing the two counters to force that one counter will expire im-mediately. If the software is not able to detect this via ESM interrupt and status flag, a fault will be set.	Immediate	Ignition latched	EBD: R2 ABS: R2 TC: R2 YSC: R2 HBA: R2 EDTR: R2 Brake AC:R2 HA : R2 ITPM :R2	**Display:** **PFV:** No	None

PROPRIETARY NOTICE: This document is copyright and the property of TRW Automotive Inc. It is disclosed in confidence. It may not be copied (in whole or in part), disclosed to others or used for manufacturing, without the prior written consent of TRW Automotive Inc.
© TRW Automotive Inc. 2006

5.4.8 IMM Fault R4 (Only use for ESC)

DTC Code	Fault symptom	Condition for recognition	Reason for fault	Detection rules	Detection time	Latch type	System response	Driver notification -------- PFV(Yes/No)	Remarks
510A	00	Ignition On, Continuous Failsafe, If IMM Tx error comes continuously 5 times	***The IMM module was not able to transmit a message to the other core correctly***	**R4 IMM Fault:** Every received word which is transferred with the IMM module will be inverted and transmitted back to the sender. The sender will check if the received acknowledge will fit to the word which was send otherwise the sender will retry. If a number of retries is reached before the word was transmitted correctly, a fault is set..	Immediately	Ignition latched	EBD: R2 ABS: R2 TC: R2 YSC: R2 HBA: R2 EDTR: R2 Brake AC:R2 HA : R2 ITPM :R2	**Display:** **PFV:** No	None

PROPRIETARY NOTICE: This document is copyright and the property of TRW Automotive Inc. It is disclosed in confidence. It may not be copied (in whole or in part), disclosed to others or used for manufacturing, without the prior written consent of TRW Automotive Inc.
© TRW Automotive Inc. 2006

5.4.9 IMM Fault M3 (Only use for ESC)

DTC Code	Fault symptom	Condition for recognition	Reason for fault	Detection rules	Detection time	Latch type	System response	Driver notification -------- PFV (Yes/No)	Remarks
510A	00	Ignition On, Continuous Failsafe. , If IMM Tx error comes continuously 5 times	***The IMM module was not able to transmit a message to the other core correctly***	**M3 IMM Fault:** Every received word which is transferred with the IMM module will be inverted and transmitted back to the sender. The sender will check if the received acknowledge will fit to the word which was send otherwise the sender will retry. If a number of retries is reached before the word was transmitted correctly, a fault is set.	Immediately	Ignition latched	EBD: R2 ABS: R2 TC: R2 YSC: R2 HBA: R2 EDTR: R2 Brake AC:R2 HA : R2 ITPM :R2	**Display:** **PFV:** No	None

PROPRIETARY NOTICE: This document is copyright and the property of TRW Automotive Inc. It is disclosed in confidence. It may not be copied (in whole or in part), disclosed to others or used for manufacturing, without the prior written consent of TRW Automotive Inc.
© TRW Automotive Inc. 2006

5.4.10 Lockup M3 Fault (Only use for ESC)

DTC Code	Fault symptom	Condition for recognition	Reason for fault	Detection rules	Detection time	Latch type	System response	Driver notification -------- PFV (Yes/No)	Remarks
510A	00	Ignition On, Continuous Failsafe If the M3 Lockup exception comes continuously 5 times	**Failure of memory system, missing flash parity or ECC in M3 memory**	**Lockup M3 Fault:** In the architecture of ARM Cortex M3 profile when an error condition occurs, the corresponding fault handler will be triggered. If another fault takes place inside the usage fault/bus fault/memory management fault handler or NMI handler, the hard fault handler will be triggered. When another fault happens inside the hard fault handler, Cortex M3 will enter lockup state. The default reaction of TMS570 hardware is auto reset of Cortex M3 subsystem after 256 clocks.	Immediately	Ignition latched	EBD: R2 ABS: R2 TC: R2 YSC: R2 HBA: R2 EDTR: R2 Brake AC:R2 HA : R2 ITPM :R2	**Display:** **PFV:** No	None

PROPRIETARY NOTICE: This document is copyright and the property of TRW Automotive Inc. It is disclosed in confidence. It may not be copied (in whole or in part), disclosed to others or used for manufacturing, without the prior written consent of TRW Automotive Inc.
© TRW Automotive Inc. 2006

5.4.11 Imprecise Abort M3 Fault

DTC Code	Fault symptom	Condition for recognition	Reason for fault	Detection rules	Detection time	Latch type	System response	Driver notification -------- PFV (Yes/No)	Remarks
510A	00	Ignition On, Continuous Failsafe, If the M3 Abort exception comes continuously 5 times	***-Systematic SW failure that results in SW writing to unimplemented memory***	**Imprecise Abort M3 Fault:** Imprecise aborts in Cortex M3 sub system happen when external to the CPU core memory system registers access violation due to various reasons. Imprecision means that at the time of a failure CPU can not determine which access causes the failure. This is always true for pipelined or buffered memory writes.	Immediately	Ignition latched	EBD: R2 ABS: R2 TC: R2 YSC: R2 HBA: R2 EDTR: R2 Brake AC:R2 HA : R2 ITPM :R2	**Display:** **PFV:** No	None

PROPRIETARY NOTICE: This document is copyright and the property of TRW Automotive Inc. It is disclosed in confidence. It may not be copied (in whole or in part), disclosed to others or used for manufacturing, without the prior written consent of TRW Automotive Inc.
© TRW Automotive Inc. 2006

5.4.12 Rom Check R4 Fault (Only use for ESC)

DTC Code	Fault symptom	Condition for recog-nition	Reason for fault	Detection rules	Detection time	Latch type	System response	Driver notification -------- PFV (Yes/No)	Remarks
510A	00	Ignition On, Continuous Failsafe	***- Defective microprocessor.*** ***- Incorrect fault detection algorithm.***	**R4 Rom Check Fault:** Each ROM section is 32 bytes check summed byte by byte. Each byte will be added to the current checksum for a section. If the byte being checked is the last byte of a section, then the section is verified for a correct checksum. Basically, each ROM sections checksum should equal zero and if it doesn't, a fault is set. ROM_FAILURE_R4 ROM_FAILURE_M3 Parity fails when ROM is read when needed or by background test.	Immediately	Ignition latched	EBD: R2 ABS: R2 TC: R2 YSC: R2 HBA: R2 EDTR: R2 Brake AC:R2 HA : R2 ITPM :R2	**Display:** **PFV:** No	None

PROPRIETARY NOTICE: This document is copyright and the property of TRW Automotive Inc. It is disclosed in confidence. It may not be copied (in whole or in part), disclosed to others or used for manufacturing, without the prior written consent of TRW Automotive Inc.
© TRW Automotive Inc. 2006

5.4.13 Rom Check M3 Fault

DTC Code	Fault symptom	Condition for recog-nition	Reason for fault	Detection rules	Detection time	Latch type	System response	Driver notification -------- PFV(Yes/No)	Remarks
510A	00	Ignition On, Continuous Failsafe	***- Defective microprocessor.*** ***- Incorrect fault detection algorithm.***	**M3 Rom Check Fault:** Each ROM section is 32 bytes check summed byte by byte. Each byte will be added to the current checksum for a section. If the byte being checked is the last byte of a section, then the section is verified for a correct checksum. Basically, each ROM sections checksum should equal zero and if it doesn't, a fault is set. ROM_FAILURE_R4 ROM_FAILURE_M3 Parity fails when ROM is read when needed or by background test.	Immediately	Ignition latched	EBD: R2 ABS: R2 TC: R2 YSC: R2 HBA: R2 EDTR: R2 Brake AC:R2 HA : R2 ITPM :R2	**Display:** **PFV:** No	None

PROPRIETARY NOTICE: This document is copyright and the property of TRW Automotive Inc. It is disclosed in confidence. It may not be copied (in whole or in part), disclosed to others or used for manufacturing, without the prior written consent of TRW Automotive Inc.
© TRW Automotive Inc. 2006

5.4.14 CRC Rom Check R4 Fault (Only use for ESC)

DTC Code	Fault symptom	Condition for recog-nition	Reason for fault	Detection rules	Detection time	Latch type	System response	Driver notification -------- PFV(Yes/No)	Remarks
510A	00	Ignition On, Continuous Failsafe	***-Defective micro-processor*** **-Incorrect fault detection algo-rithm**	**R4 CRC Rom Check Fault:** The ROM selftest is a dynamic test that is called from the scheduler at a rate of 14 msec. Each ROM section is check-summed byte by byte. Each byte will be added to the current checksum for a section. If the byte being checked is the last byte of a section, then the section is verified for a correct checksum. Basically, each ROM sections checksum should equal zero and if it doesn't, a fault is set.	Immediately	Ignition latched	EBD: R2 ABS: R2 TC: R2 YSC: R2 HBA: R2 EDTR: R2 Brake AC:R2 HA : R2 ITPM :R2	**Display:** **PFV:** No	None

PROPRIETARY NOTICE: This document is copyright and the property of TRW Automotive Inc. It is disclosed in confidence. It may not be copied (in whole or in part), disclosed to others or used for manufacturing, without the prior written consent of TRW Automotive Inc.
© TRW Automotive Inc. 2006

5.4.15 CRC Rom Check M3 Fault

DTC Code	Fault symptom	Condition for recog-nition	Reason for fault	Detection rules	Detection time	Latch type	System response	Driver notification -------- PFV (Yes/No)	Remarks
510A	00	Ignition On, Continuous Failsafe	***-Defective micro-processor*** **-Incorrect fault detection algo-rithmr**	**M3 CRC Rom Check Fault:** The ROM selftest is a dynamic test that is called from the scheduler at a rate of 14 msec. Each ROM section is check-summed byte by byte. Each byte will be added to the current checksum for a section. If the byte being checked is the last byte of a section, then the section is verified for a correct checksum. Basically, each ROM sections checksum should equal zero and if it doesn't, a fault is set.	Immediately	Ignition latched	EBD: R2 ABS: R2 TC: R2 YSC: R2 HBA: R2 EDTR: R2 Brake AC:R2 HA : R2 ITPM :R2	**Display:** **PFV:** No	None

PROPRIETARY NOTICE: This document is copyright and the property of TRW Automotive Inc. It is disclosed in confidence. It may not be copied (in whole or in part), disclosed to others or used for manufacturing, without the prior written consent of TRW Automotive Inc.
© TRW Automotive Inc. 2006

5.4.16 Dynamic RAM Check Failure R4 Fault

DTC Code	Fault symptom	Condition for recog-nition	Reason for fault	Detection rules	Detection time	Latch type	System response	Driver notification -------- PFV (Yes/No)	Remarks
510A	00	Ignition On, Continuous Failsafe	***Defective micro-processor***	**Dynamic RAM Check Failure R4 Fault:** The dynamic RAM self test begins immediately after the mi-croprocessor comes out of reset mode in response to the vehicle ignition being turned on. The dynamic RAM check algorithm runs continuously in the background schedule. The following steps (tests) are performed each time the dy-namic RAM failsafe is run: 1. Do sanity check on the microprocessors registers that store the RAM data being tested temporarily during the RAM check. This simple read/write test to test these registers 2. Do an address check on one of the RAM address lines. 3. Verify that RAM location used to store the persistent ad-dress line test address (offset) advances to the next address line address. 4. Do a data check on a single RAM address that includes a dependency check against another RAM location that is ad-dress ad-jacent to the RAM location being tested. 5. Verify that RAM location used to store the persistent data test address advances to the next test address. If any test fails, the system is forced into a reset by writing an invalid watchdog key to the system registers. If the RAM failure is NOT detected by the boot loader static RAM check algorithm then a fault code is set and the exact type of RAM failure is written to NVRAM. It is assumed that if the boot loader detects a RAM failure, that it will force the system into an endless program loop. On R4 is additional the ECC Ram check always active. This ECC can not be executed on M3 caused by not protect-able R4 access to M3 ram.	Immediately	Ignition latched	EBD: R2 ABS: R2 TC: R2 YSC: R2 HBA: R2 EDTR: R2 Brake AC:R2 HA : R2 ITPM :R2	**Display:** **PFV:** No	None

PROPRIETARY NOTICE: This document is copyright and the property of TRW Automotive Inc. It is disclosed in confidence. It may not be copied (in whole or in part), disclosed to others or used for manufacturing, without the prior written consent of TRW Automotive Inc.
© TRW Automotive Inc. 2006

5.4.17 R4 RAM Check Fault (Only use for ESC)

DTC Code	Fault symptom	Condition for recognition	Reason for fault	Detection rules	Detection time	Latch type	System response	Driver notification -------- PFV(Yes/No)	Remarks
510A	00	Ignition On, Continuous Failsafe	***Defective microprocessor***	**R4 RAM Check Fault:** The dynamic RAM self test begins immediately after the microprocessor comes out of reset mode in response to the vehicle ignition being turned on. The dynamic RAM check algorithm runs continuously in the background schedule. The following steps (tests) are performed each time the dynamic RAM failsafe is run: 1. Do sanity check on the microprocessors registers that store the RAM data being tested temporarily during the RAM check. This simple read/write test to test these registers 2. Do an address check on one of the RAM address lines. 3. Verify that RAM location used to store the persistent address line test address (offset) advances to the next address line address. 4. Do a data check on a single RAM address that includes a dependency check against another RAM location that is address adjacent to the RAM location being tested. 5. Verify that RAM location used to store the persistent data test address advances to the next test address. If any test fails, the system is forced into a reset by writing an invalid watchdog key to the system registers. If the RAM failure is NOT detected by the boot loader static RAM check algorithm then a fault code is set and the exact type of RAM failure is written to NVRAM. It is assumed that if the boot loader detects a RAM failure, that it will force the system into an endless program loop. On R4 is additional the ECC Ram check always active. This ECC can not be executed on M3 caused by not protectable R4 access to M3 ram.	Immediately	Ignition latched	EBD: R2 ABS: R2 TC: R2 YSC: R2 HBA: R2 EDTR: R2 Brake AC:R2 HA : R2 ITPM :R2	**Display:** **PFV:** No	None

PROPRIETARY NOTICE: This document is copyright and the property of TRW Automotive Inc. It is disclosed in confidence. It may not be copied (in whole or in part), disclosed to others or used for manufacturing, without the prior written consent of TRW Automotive Inc.
© TRW Automotive Inc. 2006

5.4.18 M3 RAM Check Fault

DTC Code	Fault symptom	Condition for recog-nition	Reason for fault	Detection rules	Detection time	Latch type	System response	Driver notification -------- PFV(Yes/No)	Remarks
510A	00	Ignition On, Continuous Failsafe	***Defective micro-processor***	**M3 RAM Check Fault:** The dynamic RAM self test begins immediately after the mi-croprocessor comes out of reset mode in response to the vehicle ignition being turned on. The dynamic RAM check algorithm runs continuously in the background schedule. The following steps (tests) are performed each time the dy-namic RAM failsafe is run: 1. Do sanity check on the microprocessors registers that store the RAM data being tested temporarily during the RAM check. This simple read/write test to test these registers 2. Do an address check on one of the RAM address lines. 3. Verify that RAM location used to store the persistent ad-dress line test address (offset) advances to the next address line address. 4. Do a data check on a single RAM address that includes a dependency check against another RAM location that is ad-dress adjacent to the RAM location being tested. 5. Verify that RAM location used to store the persistent data test address advances to the next test address. If any test fails, the system is forced into a reset by writing an invalid watchdog key to the system registers. If the RAM failure is NOT detected by the boot loader static RAM check algorithm then a fault code is set and the exact type of RAM failure is written to NVRAM. It is assumed that if the boot loader detects a RAM failure, that it will force the system into an endless program loop. On R4 is additional the ECC Ram check always active. This ECC can not be executed on M3 caused by not protect-able R4 access to M3 ram.	Immediately	Ignition latched	EBD: R2 ABS: R2 TC: R2 YSC: R2 HBA: R2 EDTR: R2 Brake AC:R2 HA : R2 ITPM :R2	**Display:** **PFV:** No	None

PROPRIETARY NOTICE: This document is copyright and the property of TRW Automotive Inc. It is disclosed in confidence. It may not be copied (in whole or in part), disclosed to others or used for manufacturing, without the prior written consent of TRW Automotive Inc.
© TRW Automotive Inc. 2006

5.4.19 RAM ECC Check Failure_M3 Fault

DTC Code	Fault symptom	Condition for recog-nition	Reason for fault	Detection rules	Detection time	Latch type	System response	Driver notification -------- PFV (Yes/No)	Remarks
510A	00	Ignition On, Continuous Failsafe	***Defective micro-processor***	**RAM ECC Check Failure_M3 Fault:** This failure is the result of mismatch calculated by M3 RAM wrapper circuit ECC syndrome and expected ECC syndrome from pre-programmed into FLASH set of values. The validity of ECC circuits is periodically tested against predefined ECC syndromes. If this test fails the fault will be set.	Immediately	Ignition latched	EBD: R2 ABS: R2 TC: R2 YSC: R2 HBA: R2 EDTR: R2 Brake AC:R2 HA : R2 ITPM :R2	**Display:** **PFV:** No	None

PROPRIETARY NOTICE: This document is copyright and the property of TRW Automotive Inc. It is disclosed in confidence. It may not be copied (in whole or in part), disclosed to others or used for manufacturing, without the prior written consent of TRW Automotive Inc.
© TRW Automotive Inc. 2006

5.4.20 DMA Failure Fault ESC (Only use for ESC)

DTC Code	Fault symptom	Condition for recog-nition	Reason for fault	Detection rules	Detection time	Latch type	System response	Driver notification -------- PFV (Yes/No)	Remarks
510A	00	Ignition On, Continuous Failsafe	***Defective micro-processor***	**DMA Failure Fault:** The DMA_FAILURE fault monitor is designed to monitor various bus errors when performing DMA transfers. The DMA bus faults are identified and monitored by the Error Signaling Module(ESM). Both group 1 and group 2 DMA bus errors are monitored. The fault reaction to these bus errors are as defined by ESM..	Immediately	Ignition latched	EBD: R2 ABS: R2 TC: R2 YSC: R2 HBA: R2 EDTR: R2 Brake AC:R2 HA : R2 ITPM :R2	**Display:** **PFV:** No	None

PROPRIETARY NOTICE: This document is copyright and the property of TRW Automotive Inc. It is disclosed in confidence. It may not be copied (in whole or in part), disclosed to others or used for manufacturing, without the prior written consent of TRW Automotive Inc.
© TRW Automotive Inc. 2006

5.4.21 RAM corrupts associated with the state variables R4 (Only use for ESC)

DTC Code	Fault symptom	Condition for recognition	Reason for fault	Detection rules	Detection time	Latch type	System response	Driver notification -------- PFV (Yes/No)	Remarks
510A	00	Ignition On, Continuous Failsafe	***A state variable corruption encountered. RAM corruptions by software or environmental conditions causing bit flips.***	**Ctitical Data Failure R4 Fault:** This fault is checked whenever state actions are processed and incase case of a failure the fault is set immediately. Critical state variables are double buffered. If one state is modified without the other changing, this fault is set.	Immediately	Ignition latched	EBD: R2 ABS: R2 TC: R2 YSC: R2 HBA: R2 EDTR: R2 Brake AC:R2 HA : R2 ITPM :R2	**Display:** **PFV:** No	None

PROPRIETARY NOTICE: This document is copyright and the property of TRW Automotive Inc. It is disclosed in confidence. It may not be copied (in whole or in part), disclosed to others or used for manufacturing, without the prior written consent of TRW Automotive Inc.
© TRW Automotive Inc. 2006

5.4.22 RAM corrupts associated with the state variables M3

DTC Code	Fault symptom	Condition for recognition	Reason for fault	Detection rules	Detection time	Latch type	System response	Driver notification -------- PFV(Yes/No)	Remarks
510A	00	Ignition On, Continuous Failsafe	***A state variable corruption encountered.*** ***RAM corruptions by software or environmental conditions causing bit flips.***	**Ctitical Data Failure M3 Fault:** This fault is checked whenever state actions are processed and incase case of a failure the fault is set immediately. Critical state variables are double buffered. If one state is modified without the other changing, this fault is set.	Immediately	Ignition latched	EBD: R2 ABS: R2 TC: R2 YSC: R2 HBA: R2 EDTR: R2 Brake AC:R2 HA : R2 ITPM :R2	**Display:** **PFV:** No	None

PROPRIETARY NOTICE: This document is copyright and the property of TRW Automotive Inc. It is disclosed in confidence. It may not be copied (in whole or in part), disclosed to others or used for manufacturing, without the prior written consent of TRW Automotive Inc.
© TRW Automotive Inc. 2006

5.4.23 HET1 RAM Check Fault

DTC Code	Fault symptom	Condition for recognition	Reason for fault	Detection rules	Detection time	Latch type	System response	Driver notification -------- PFV (Yes/No)	Remarks
510A	00	Ignition On, Continuous Failsafe	***- Write test pattern failed*** ***- Defective microprocessor***	**HET RAM Check Fault:** The TMS570 provides a separate RAM location for the HET. It is not part of the 'normal' RAM but located somewhere in the peripherals area. The RAM test writes in a blockwise manner several pattern into that location and checks that all bytes have been written successfully. If not the fault is set. Before this failsafe routine can be called, the HET must disabled prior because the HET program will be destroyed. This test is executed only at start up.	Immediately	Ignition latched	EBD: R2 ABS: R2 TC: R2 YSC: R2 HBA: R2 EDTR: R2 Brake AC:R2 HA : R2 ITPM :R2	**Display:** **PFV:** No	None

PROPRIETARY NOTICE: This document is copyright and the property of TRW Automotive Inc. It is disclosed in confidence. It may not be copied (in whole or in part), disclosed to others or used for manufacturing, without the prior written consent of TRW Automotive Inc.
© TRW Automotive Inc. 2006

5.4.24 HET2 RAM Check Fault

DTC Code	Fault symptom	Condition for recognition	Reason for fault	Detection rules	Detection time	Latch type	System response	Driver notification -------- PFV (Yes/No)	Remarks
510A	00	Ignition On, Continuous Failsafe	***- Write test pattern failed*** ***- Defective microprocessor***	**HET RAM Check Fault:** The TMS570 provides a separate RAM location for the HET. It is not part of the 'normal' RAM but located somewhere in the peripherals area. The RAM test writes in a blockwise manner several pattern into that location and checks that all bytes have been written successfully. If not the fault is set. Before this failsafe routine can be called, the HET must disabled prior because the HET program will be destroyed. This test is executed only at start up.	Immediately	Ignition latched	EBD: R2 ABS: R2 TC: R2 YSC: R2 HBA: R2 EDTR: R2 Brake AC:R2 HA : R2 ITPM :R2	**Display:** **PFV:** No	None

PROPRIETARY NOTICE: This document is copyright and the property of TRW Automotive Inc. It is disclosed in confidence. It may not be copied (in whole or in part), disclosed to others or used for manufacturing, without the prior written consent of TRW Automotive Inc.
© TRW Automotive Inc. 2006

5.4.25 RAM Check Failure _R4

DTC Code	Fault symptom	Condition for recognition	Reason for fault	Detection rules	Detection time	Latch type	System response	Driver notification -------- PFV (Yes/No)	Remarks
510A	00	Ignition On, Continuous Failsafe	***Faulty microprocessor, NHET peripheral, NHET RAM***	**RAM Check Failure NHET PARITY Fault:** In A-series processors the NHET RAM has built in parity checking. If a RAM failure is detected an interrupt and a flag is set to set this fault (single occurrence).	Immediately	Ignition latched	EBD: R2 ABS: R2 TC: R2 YSC: R2 HBA: R2 EDTR: R2 Brake AC:R2 HA : R2 ITPM :R2	**Display:** **PFV:** No	None

PROPRIETARY NOTICE: This document is copyright and the property of TRW Automotive Inc. It is disclosed in confidence. It may not be copied (in whole or in part), disclosed to others or used for manufacturing, without the prior written consent of TRW Automotive Inc.
© TRW Automotive Inc. 2006

5.4.26 HET1 Parity Check Failure

DTC Code	Fault symptom	Condition for recog-nition	Reason for fault	Detection rules	Detection time	Latch type	System response	Driver notification -------- PFV (Yes/No)	Remarks
510A	00	Ignition on,Continuous Failsafe	***Faulty microprocessor, HET peripheral, HET RAM***	**HET PARITFault:** n A-series processors the NHET RAM has built in parity checking. If a RAM failure is detected an interrupt and a flag is set to set this fault (single occurrence).	Immediately	Ignition latched	EBD: R2 ABS: R2 TC: R2 YSC: R2 HBA: R2 EDTR: R2 Brake AC:R2 HA : R2 ITPM :R2	**Display:** **PFV:** No	None

PROPRIETARY NOTICE: This document is copyright and the property of TRW Automotive Inc. It is disclosed in confidence. It may not be copied (in whole or in part), disclosed to others or used for manufacturing, without the prior written consent of TRW Automotive Inc.
© TRW Automotive Inc. 2006

5.4.27 Cpu Mode Stack Fault R4 Fault (Only use for ESC)

DTC Code	Fault symptom	Condition for recog-nition	Reason for fault	Detection rules	Detection time	Latch type	System response	Driver notification -------- PFV (Yes/No)	Remarks
510A	00	Ignition On, Continuous Failsafe	***-Improper application code.*** ***-Defective microprocessor.***	**Cpu Mode Stack Fault R4 Fault:** To detect underflow and overflow of the system stacks, a word of RAM is reserved at the end of each of the system stacks. A word of RAM is also reserved at the uppermost address of the stack section. The contents of these re-served words will be monitored periodically to determine if they have been modified. To detect cases where the appli-cation could be pushing a value onto the stack that matches the test value, the test value that is stored at these reserved addresses will be changed each update.	Immediately	Ignition latched	EBD: R2 ABS: R2 TC: R2 YSC: R2 HBA: R2 EDTR: R2 Brake AC:R2 HA : R2 ITPM :R2	**Display:** **PFV:** No	None

PROPRIETARY NOTICE: This document is copyright and the property of TRW Automotive Inc. It is disclosed in confidence. It may not be copied (in whole or in part), disclosed to others or used for manufacturing, without the prior written consent of TRW Automotive Inc.
© TRW Automotive Inc. 2006

5.4.28 Cpu Mode Stack Fault M3 Fault

DTC Code	Fault symptom	Condition for recog-nition	Reason for fault	Detection rules	Detection time	Latch type	System response	Driver notification -------- PFV (Yes/No)	Remarks
510A	00	Ignition On, Continuous Failsafe	***-Improper application code.*** ***-Defective microprocessor.***	**Cpu Mode Stack Fault M3 Fault:** The available stack for the failsafe micro is periodically checked. Will a value one of the last three free stack positions be stored, a previously stored default value will be overwritten. Through this a stack overflow is detected and the fault is set.	Immediately	Ignition latched	EBD: R2 ABS: R2 TC: R2 YSC: R2 HBA: R2 EDTR: R2 Brake AC:R2 HA : R2 ITPM :R2	**Display:** **PFV:** No	None

PROPRIETARY NOTICE: This document is copyright and the property of TRW Automotive Inc. It is disclosed in confidence. It may not be copied (in whole or in part), disclosed to others or used for manufacturing, without the prior written consent of TRW Automotive Inc.
© TRW Automotive Inc. 2006

5.4.29 Task Stack Fault R4 (Only use for ESC)

DTC Code	Fault symptom	Condition for recog-nition	Reason for fault	Detection rules	Detection time	Latch type	System response	Driver notification -------- PFV (Yes/No)	Remarks
510A	00	Ignition On, Continuous Failsafe	***Stack overflow on a user task stack***	**Task Stack Fault R4 Fault:** During startup all user task stacks are filled with a pattern. After each context switch, the bottom of the current user task stack is checked for the pattern. If this pattern is overwritten, the maximum stack size is reached and a fault is detected.	Immediately	Ignition latched	EBD: R2 ABS: R2 TC: R2 YSC: R2 HBA: R2 EDTR: R2 Brake AC:R2 HA : R2 ITPM :R2	**Display:** **PFV:** No	None

PROPRIETARY NOTICE: This document is copyright and the property of TRW Automotive Inc. It is disclosed in confidence. It may not be copied (in whole or in part), disclosed to others or used for manufacturing, without the prior written consent of TRW Automotive Inc.
© TRW Automotive Inc. 2006

5.4.30 Task Stack Fault M3

DTC Code	Fault symptom	Condition for recog-nition	Reason for fault	Detection rules	Detection time	Latch type	System response	Driver notification -------- PFV(Yes/No)	Remarks
510A	00	Ignition On, Continuous Failsafe	***Stack overflow on a user task stack***	**Task Stack Fault M3 Fault:** During startup all user task stacks are filled with a pattern. After each context switch, the bottom of the current user task stack is checked for the pattern. If this pattern is overwritten, the maximum stack size is reached and a fault is detected.	Immediately	Ignition latched	EBD: R2 ABS: R2 TC: R2 YSC: R2 HBA: R2 EDTR: R2 Brake AC:R2 HA : R2 ITPM :R2	**Display:** **PFV:** No	None

PROPRIETARY NOTICE: This document is copyright and the property of TRW Automotive Inc. It is disclosed in confidence. It may not be copied (in whole or in part), disclosed to others or used for manufacturing, without the prior written consent of TRW Automotive Inc.
© TRW Automotive Inc. 2006

5.4.31 Task Overrun Failure R4 (Only use for ESC)

DTC Code	Fault symptom	Condition for recog-nition	Reason for fault	Detection rules	Detection time	Latch type	System response	Driver notification -------- PFV(Yes/No)	Remarks
510A	00	Ignition On, Continuous Failsafe	***Task execution time on R4 is too long***	**Task Overrun Failure R4 Fault:** A task overrun error can be detected with a task activation counter. If a task is activated, the task activation counter is incremented and will be decremented again when the task terminates. In case of a task overrun, the task has not yet terminated and the activation is not decremented. If the task shall be activated again, the overrun error is detected, because the current activation counter is already equal than the max number of allowed activations and shall not be increased further.	Immediately	Ignition latched	EBD: R2 ABS: R2 TC: R2 YSC: R2 HBA: R2 EDTR: R2 Brake AC:R2 HA : R2 ITPM :R2	**Display:** **PFV:** No	None

PROPRIETARY NOTICE: This document is copyright and the property of TRW Automotive Inc. It is disclosed in confidence. It may not be copied (in whole or in part), disclosed to others or used for manufacturing, without the prior written consent of TRW Automotive Inc.
© TRW Automotive Inc. 2006

5.4.32 Task Overrun Failure M3

DTC Code	Fault symptom	Condition for recog-nition	Reason for fault	Detection rules	Detection time	Latch type	System response	Driver notification -------- PFV (Yes/No)	Remarks
510A	00	Ignition On, Continuous Failsafe	***Task execution time on M3 is too long***	**Task Overrun Failure M3 Fault:** A task overrun error can be detected with a task activation counter. If a task is activated, the task activation counter is incremented and will be decremented again when the task terminates. In case of a task overrun, the task has not yet terminated and the activation is not decremented. If the task shall be activated again, the overrun error is detected, because the current activation counter is already equal than the max number of allowed activations and shall not be increased further.	Immediately	Ignition latched	EBD: R2 ABS: R2 TC: R2 YSC: R2 HBA: R2 EDTR: R2 Brake AC:R2 HA : R2 ITPM :R2	**Display:** **PFV:** No	None

PROPRIETARY NOTICE: This document is copyright and the property of TRW Automotive Inc. It is disclosed in confidence. It may not be copied (in whole or in part), disclosed to others or used for manufacturing, without the prior written consent of TRW Automotive Inc.
© TRW Automotive Inc. 2006

5.4.33 External Watchdog Failure

DTC Code	Fault symptom	Condition for recognition	Reason for fault	Detection rules	Detection time	Latch type	System response	Driver notification -------- PFV(Yes/No)	Remarks
510A	00	Ignition On, Continuous Failsafe	***-Malfunctioning External Watchdog Circuit.*** ***- Defective System ASIC.*** ***- Defective microprocessor.*** ***- Defective power switch.*** ***-Defective printed circuit board.*** ***-Nominal: Malfunction of the external watchdog circuit.*** ***-Other: Open circuit in the inhibit line between external watchdog and power relay predriver.***	**External Watchdog Failure Fault:** The ECU includes a watchdog circuit external to the microprocessor to guarantee a return to conventional braking if the microprocessor stops functioning. During normal operation, the microprocessor outputs a square wave to the external watchdog circuit. If the pulses stop, the external watchdog circuit inhibits the power switch. Inability to drive the power switch inhibits operation of all solenoid valves. During the ignition selftest, the external watchdog circuit is tested by not outputting the square wave to the watchdog and then commanding the power switch to on. If the power switch voltage feedback (system voltage) is greater than 80 % of the measured ignition voltage for more than 30 msec, the external watchdog is not functioning properly and a fault is set.	Immediately	Ignition latched	EBD: R2 ABS: R2 TC: R2 YSC: R2 HBA: R2 EDTR: R2 Brake AC:R2 HA : R2 ITPM :R2	**Display:** **PFV:** No	None

PROPRIETARY NOTICE: This document is copyright and the property of TRW Automotive Inc. It is disclosed in confidence. It may not be copied (in whole or in part), disclosed to others or used for manufacturing, without the prior written consent of TRW Automotive Inc.
© TRW Automotive Inc. 2006

5.4.34 External Secondary Shutoff Path Failure (WDEN pin) (Only use for ESC)

DTC Code	Fault symptom	Condition for recog-nition	Reason for fault	Detection rules	Detection time	Latch type	System response	Driver notification -------- PFV (Yes/No)	Remarks
510A	00	Ignition On, Continuous Failsafe	***ECU defect***	**External Secondary Shutoff Path Failure Fault:** The ECU includes a watchdog circuit external to the microprocessor to guarantee a return to conventional braking if the microprocessor stops functioning. This is realized by a watchdog enable pin (WDEN) to the system ASIC. If the WDEN pin s low, the power switch is switched off and disable the ENQ which disables HFMC_RST and put motor IC in reset to return to conventional braking. In the dual microprocessor configuration, the WDEN pin is connected to the 2nd cortex (M3) to work as a 2nd disable path for the system. If the 2nd cortex (M3) detects a critical fault, it allows the independent path to disable the system even if the microprocessor 1 does not disable the system. During the ignition cycle system self-test, this functionality is tested by by disabling the WDEN pin via microprocessor so that it can be checked if the power switch is off and motor is not working on this condition. This fault is set while WDEN pin is disabled and 1.If the power switch voltage feedback (switched battery) is greater than 80 % of the measured system voltage for more than 30 msec Or 2. If motor speed is greater than 210RPM for 30ms. The check of motor activation is not done if an Open Motor was detecting before the WDEN pin was disabled because an open motor results in a motor voltage feedback that would indicate an activated motor which would lead to false fault detection.	Immediately	Ignition latched	EBD: R2 ABS: R2 TC: R2 YSC: R2 HBA: R2 EDTR: R2 Brake AC:R2 HA : R2 ITPM :R2	**Display:** **PFV:** No	None

PROPRIETARY NOTICE: This document is copyright and the property of TRW Automotive Inc. It is disclosed in confidence. It may not be copied (in whole or in part), disclosed to others or used for manufacturing, without the prior written consent of TRW Automotive Inc.
© TRW Automotive Inc. 2006

5.4.35 Watchdog Dynamic Test Failure

DTC Code	Fault symptom	Condition for recog-nition	Reason for fault	Detection rules	Detection time	Latch type	System response	Driver notification -------- PFV (Yes/No)	Remarks
510A	00	Ignition On, Continuous Failsafe	***Watchdog coun-ter doesn't start to count***	**Watchdog Dynamic Test Failure Fault:** The watchdog will be triggered with a faulty value to start the counter. This counter reads back from the Main micro. The normal value of the counter is 7, during the test the counter has decrement to the value 5.	10msec	Ignition latched	EBD: R2 ABS: R2 TC: R2 YSC: R2 HBA: R2 EDTR: R2 Brake AC:R2 HA : R2 ITPM :R2	**Display:** **PFV:** No	None

PROPRIETARY NOTICE: This document is copyright and the property of TRW Automotive Inc. It is disclosed in confidence. It may not be copied (in whole or in part), disclosed to others or used for manufacturing, without the prior written consent of TRW Automotive Inc.
© TRW Automotive Inc. 2006

5.4.36 AD Peripheral Timeout Failure

DTC Code	Fault symptom	Condition for recog-nition	Reason for fault	Detection rules	Detection time	Latch type	System response	Driver notification -------- PFV (Yes/No)	Remarks
510A	00	Ignition On, Continuous Failsafe	***The ADC peri-pheral of the Main micro stick in a conversion.*** ***-Hardware fault***	**AD Peripheral Timeout Failure Fault:** When reading an A/D channel, the software enters a "wait" loop where it looks for a bit in an A/D register to be set, indi-cating that the conversion is complete. A "timeout" mechan-ism exists that breaks out of the wait loop after 100 usec (well longer than it is ever expected to complete an A/D conver-sion) has elapsed. If this timeout mechanism is executed, a fault code is set.	2msecs	Ignition latched	EBD: R2 ABS: R2 TC: R2 YSC: R2 HBA: R2 EDTR: R2 Brake AC:R2 HA : R2 ITPM :R2	**Display:** **PFV:** No	None

PROPRIETARY NOTICE: This document is copyright and the property of TRW Automotive Inc. It is disclosed in confidence. It may not be copied (in whole or in part), disclosed to others or used for manufacturing, without the prior written consent of TRW Automotive Inc.
© TRW Automotive Inc. 2006

5.4.37 Lockup of ADC Event Group (Only use for ESC)

DTC Code	Fault symptom	Condition for recog-nition	Reason for fault	Detection rules	Detection time	Latch type	System response	Driver notification -------- PFV (Yes/No)	Remarks
510A	00	Ignition On, Continuous Failsafe	***Defective printed circuit board*** ***Defective micro-processor***	**Lockup of ADC Event Group** The ADC Event Group is triggered synchronous with NHET according solenoid control loop. If no conversion is done with-in 10 ms, the fault gets set	10 msecs	Ignition latched	EBD: R2 ABS: R2 TC: R2 YSC: R2 HBA: R2 EDTR: R2 Brake AC:R2 HA : R2 ITPM :R2	**Display:** **PFV:** No	None

PROPRIETARY NOTICE: This document is copyright and the property of TRW Automotive Inc. It is disclosed in confidence. It may not be copied (in whole or in part), disclosed to others or used for manufacturing, without the prior written consent of TRW Automotive Inc.
© TRW Automotive Inc. 2006

5.4.38 MIRAM AD Refresh Fault

DTC Code	Fault symptom	Condition for recog-nition	Reason for fault	Detection rules	Detection time	Latch type	System response	Driver notification -------- PFV (Yes/No)	Remarks
510A	00	Ignition On, Continuous Failsafe	***SPI communication failure , defective System ASIC***	**MIRAM AD Refresh Fault:** The fault is set when at least the A/Ds are not updated, 3 missed values for “fast rate” data, 1 missed value for “normal rate” data. Data is missed either because of a SPI overrun which causes the A/D values to be old, or by the fresh data bits in the A/D results indicating old data.	Immediate	Ignition latched	EBD: R2 ABS: R2 TC: R2 YSC: R2 HBA: R2 EDTR: R2 Brake AC:R2 HA : R2 ITPM :R2	**Display:** **PFV:** Yes	None

PROPRIETARY NOTICE: This document is copyright and the property of TRW Automotive Inc. It is disclosed in confidence. It may not be copied (in whole or in part), disclosed to others or used for manufacturing, without the prior written consent of TRW Automotive Inc.
© TRW Automotive Inc. 2006

5.4.39 MIRAM DIAG Register Fault (Only use for ESC)

DTC Code	Fault symptom	Condition for recog-nition	Reason for fault	Detection rules	Detection time	Latch type	System response	Driver notification -------- PFV (Yes/No)	Remarks
510A	00	Ignition On, Continuous Failsafe	***SPI communication failure , defective System ASIC***	**MIRAM DIAG Register Fault:** This fault is set to detect if MIRAM bits indicating faults in DIAG register. The following bits are monitored every system loop: 1) VBAT_SW overcurrent This fault is to detect excessive current loading on VBAT_SW. 1. Read VBAT_SW Over-Current bit every system loop time, increment fault counter if bit set. 2. Re-enable VBAT_SW every 1ms. 3. if fault counter > threshold, set fault 4. Once fault is set, disable VBAT_SW until next ignition cycle 2) boost over voltage This fault is set to detect Booster regulator over-voltage bit due to MIRAM booster converter failure. The fault should not be set if system voltage is detecting excessive high. 3) boost under voltage This fault is set to detect Booster regulator under-voltage bit due to MIRAM booster converter failure. 4) U2 select This fault is set to detect open/shorted pin on U2_Select. U2_Select is used to configure micro core voltage to be 1.5V or 1.9V. T-series devices should be using 1.9V, A-series should be using 1.5V. 5) prereg mode select This fault is set to detect Open/shorted pin on MOD_SEL. MOD_SEL sets a switching or linear pre-regulator. Most pro-grams use a switching regulator, but what pre-reg to expect must be configured for each application.	30 msec	Ignition latched	EBD: R2 ABS: R2 TC: R2 YSC: R2 HBA: R2 EDTR: R2 Brake AC:R2 HA : R2 ITPM :R2	**Display:** **PFV:** Yes	None

PROPRIETARY NOTICE: This document is copyright and the property of TRW Automotive Inc. It is disclosed in confidence. It may not be copied (in whole or in part), disclosed to others or used for manufacturing, without the prior written consent of TRW Automotive Inc.
© TRW Automotive Inc. 2006

5.4.40 RTOS Failure R4 Failure (Only use for ESC)

DTC Code	Fault symptom	Condition for recog-nition	Reason for fault	Detection rules	Detection time	Latch type	System response	Driver notification -------- PFV (Yes/No)	Remarks
510A	00	Ignition On, Continuous Failsafe	***Around 40 different error which are provided by the RTOS***	**RTOS Failure R4 Fault:** If any of the 40 different RTOS failure occurs is this fault set. E.g. Configuration failures in RTOS environment. .	10 msec	Ignition latched	EBD: R2 ABS: R2 TC: R2 YSC: R2 HBA: R2 EDTR: R2 Brake AC:R2 HA : R2 ITPM :R2	**Display:** **PFV:** No	None

PROPRIETARY NOTICE: This document is copyright and the property of TRW Automotive Inc. It is disclosed in confidence. It may not be copied (in whole or in part), disclosed to others or used for manufacturing, without the prior written consent of TRW Automotive Inc.
© TRW Automotive Inc. 2006

5.4.41 RTOS Failure M3 Failure

DTC Code	Fault symptom	Condition for recog-nition	Reason for fault	Detection rules	Detection time	Latch type	System response	Driver notification -------- PFV (Yes/No)	Remarks
510A	00	Ignition On, Continuous Failsafe	***Around 40 different error which are provided by the RTOS***	**RTOS Failure M3 Fault:** If any of the 40 different RTOS failure occurs is this fault set. E.g. Configuration failures in RTOS environment. .	10 msec	Ignition latched	EBD: R2 ABS: R2 TC: R2 YSC: R2 HBA: R2 EDTR: R2 Brake AC:R2 HA : R2 ITPM :R2	**Display:** **PFV:** No	None

PROPRIETARY NOTICE: This document is copyright and the property of TRW Automotive Inc. It is disclosed in confidence. It may not be copied (in whole or in part), disclosed to others or used for manufacturing, without the prior written consent of TRW Automotive Inc.
© TRW Automotive Inc. 2006

5.4.42 Unimplemented Interrupt R4 (Only use for ESC)

DTC Code	Fault symptom	Condition for recog-nition	Reason for fault	Detection rules	Detection time	Latch type	System response	Driver notification -------- PFV(Yes/No)	Remarks
510A	00	Ignition On, Continuous Failsafe	***-Incorrect application code.*** ***- Defective microprocessor*** ***- HW/SW race conditions***	**Unimplemented Interrupt R4 Fault:** This fault is set if an interrupt occurs that has no explicit interrupt handler defined at system configuration time. This fault needs to be logged if unimplmented interrupt count reaches the threshold 20.	15msec	Ignition latched	EBD: R2 ABS: R2 TC: R2 YSC: R2 HBA: R2 EDTR: R2 Brake AC:R2 HA : R2 ITPM :R2	**Display:** **PFV:** No	None

PROPRIETARY NOTICE: This document is copyright and the property of TRW Automotive Inc. It is disclosed in confidence. It may not be copied (in whole or in part), disclosed to others or used for manufacturing, without the prior written consent of TRW Automotive Inc.
© TRW Automotive Inc. 2006

5.4.43 Unimplemented Interrupt M3

DTC Code	Fault symptom	Condition for recog-nition	Reason for fault	Detection rules	Detection time	Latch type	System response	Driver notification -------- PFV (Yes/No)	Remarks
510A	00	Ignition On, Continuous Failsafe	***Incorrect application code.***	**Unimplemented Interrupt M3 Fault:** This fault is set if an interrupt occurs that has no explicit interrupt handler defined at system configuration time	15msec	Ignition latched	EBD: R2 ABS: R2 TC: R2 YSC: R2 HBA: R2 EDTR: R2 Brake AC:R2 HA : R2 ITPM :R2	**Display:** **PFV:** No	None

PROPRIETARY NOTICE: This document is copyright and the property of TRW Automotive Inc. It is disclosed in confidence. It may not be copied (in whole or in part), disclosed to others or used for manufacturing, without the prior written consent of TRW Automotive Inc.
© TRW Automotive Inc. 2006

5.4.44 Unexpected Exception R4 (Only use for ESC)

DTC Code	Fault symptom	Condition for recog-nition	Reason for fault	Detection rules	Detection time	Latch type	System response	Driver notification -------- PFV (Yes/No)	Remarks
510A	00	Ignition On, during initialization	***Incorrect application code. - Defective microprocessor.***	**Unexpected Exception R4 Fault:** This fault is set if a microprocessor exception occurs for which there is no explicit exception handler defined. This fault is set if any of the follow conditions occur: 1.System reset due to watchdog (Checked at power-up) 2.Undefined instruction exception is generated 3.Prefetch abort exception is generated 4.Data abort exception is generated 5.FIQ exception is generated (NOTE: All interrupts reset to IRQ at this point) NOTE: After 5 unexpected exceptions are detected, the micro is reset by writing an invalid value (0xFF) to the watchdog key.	Immediately	Ignition latched	EBD: R2 ABS: R2 TC: R2 YSC: R2 HBA: R2 EDTR: R2 Brake AC:R2 HA : R2 ITPM :R2	**Display:** **PFV:** No	None

PROPRIETARY NOTICE: This document is copyright and the property of TRW Automotive Inc. It is disclosed in confidence. It may not be copied (in whole or in part), disclosed to others or used for manufacturing, without the prior written consent of TRW Automotive Inc.
© TRW Automotive Inc. 2006

5.4.45 Unexpected Exception M3

DTC Code	Fault symptom	Condition for recog-nition	Reason for fault	Detection rules	Detection time	Latch type	System response	Driver notification -------- PFV (Yes/No)	Remarks
510A	00	Ignition On, Continuous Failsafe	***Incorrect application code. - Defective microprocessor.***	**Unexpected Exception M3 Fault:** This fault is set if a microprocessor exception occurs for which there is no explicit exception handler defined. This fault is set if any of the follow conditions occur: 1.System reset due to watchdog (Checked at power-up) 2.Undefined instruction exception is generated 3.Prefetch abort exception is generated 4.Data abort exception is generated 5.FIQ exception is generated (NOTE: All interrupts reset to IRQ at this point) NOTE: After 5 unexpected exceptions are detected, the micro is reset by writing an invalid value (0xFF) to the watchdog key.	Immediately	Ignition latched	EBD: R2 ABS: R2 TC: R2 YSC: R2 HBA: R2 EDTR: R2 Brake AC:R2 HA : R2 ITPM :R2	**Display:** **PFV:** No	None

PROPRIETARY NOTICE: This document is copyright and the property of TRW Automotive Inc. It is disclosed in confidence. It may not be copied (in whole or in part), disclosed to others or used for manufacturing, without the prior written consent of TRW Automotive Inc.
© TRW Automotive Inc. 2006

5.4.46 Solenoid Timeout Failure

DTC Code	Fault symptom	Condition for recog-nition	Reason for fault	Detection rules	Detection time	Latch type	System response	Driver notification -------- PFV (Yes/No)	Remarks
510A	00	Ignition On, Continuous Failsafe	***problem with the solenoid timeout mechanism***	**Solenoid Timeout Failure Fault:** Solenoid timeout events are used to indicate the end of a solenoid's pulse duration. These events are critical to safe vehicle control. Assume that a solenoid was commanded on for a given duration. If the timeout never occurred due to a problem, the solenoid would remain in the ON state and no problem would be detected. Depending on the solenoid that is continuously on, vehicle instability could be induced or braking performance could be compromised. Failsafing is added to verify that solenoid timeout events are properly generated for each of the solenoid. Because the system selftest module actively controls the solenoid in a specific pattern, it can provide a means to verify that the mechanism used to generate solenoid timeouts is functioning properly.	Immediately	Ignition latched	EBD: R2 ABS: R2 TC: R2 YSC: R2 HBA: R2 EDTR: R2 Brake AC:R2 HA : R2 ITPM :R2	**Display:** **PFV:** No	None

PROPRIETARY NOTICE: This document is copyright and the property of TRW Automotive Inc. It is disclosed in confidence. It may not be copied (in whole or in part), disclosed to others or used for manufacturing, without the prior written consent of TRW Automotive Inc.
© TRW Automotive Inc. 2006

5.4.47 Het1 faulty Interrupt functionality Failure (Only use for ESC)

DTC Code	Fault symptom	Condition for recog-nition	Reason for fault	Detection rules	Detection time	Latch type	System response	Driver notification -------- PFV (Yes/No)	Remarks
510A	00	Ignition On, Continuous Failsafe	***Defective microprocessor***	**Nhet Interrupt Test Failure Fault:** During initialization, there is test ability to generate and clear interrupts on all channels. This is done by the following se-quence: -Fill the first 32 instructions with PWCNTs set to throw an interrupt. The last one should jump to itself to cause a pro-gram overflow. -Start the NHET running and wait until the program overflow flag is set. -Stop the NHET. -Verify all interrupts are set and clear them using the same method (Offset vs Flags) as used during normal operation. If verification fails, this fault gets logged.	Immediately	Ignition latched	EBD: R2 ABS: R2 TC: R2 YSC: R2 HBA: R2 EDTR: R2 Brake AC:R2 HA : R2 ITPM :R2	**Display:** **PFV:** No	None

PROPRIETARY NOTICE: This document is copyright and the property of TRW Automotive Inc. It is disclosed in confidence. It may not be copied (in whole or in part), disclosed to others or used for manufacturing, without the prior written consent of TRW Automotive Inc.
© TRW Automotive Inc. 2006

5.4.48 Het2 faulty Interrupt functionality Failure (Only use for ESC)

DTC Code	Fault symptom	Condition for recognition	Reason for fault	Detection rules	Detection time	Latch type	System response	Driver notification -------- PFV (Yes/No)	Remarks
510A	00	Ignition On, Continuous Failsafe	***Defective microprocessor***	**Het Interrupt Test Failure Fault:** During initialization, there is test ability to generate and clear interrupts on all channels. This is done by the following sequence: -Fill the first 32 instructions with PWCNTs set to throw an interrupt. The last one should jump to itself to cause a program overflow. -Start the HET running and wait until the program overflow flag is set. -Stop the HET. -Verify all interrupts are set and clear them using the same method (Offset vs Flags) as used during normal operation. If verification fails, this fault gets logged.	Immediately	Ignition latched	EBD: R2 ABS: R2 TC: R2 YSC: R2 HBA: R2 EDTR: R2 Brake AC:R2 HA : R2 ITPM :R2	**Display:** **PFV:** No	None

PROPRIETARY NOTICE: This document is copyright and the property of TRW Automotive Inc. It is disclosed in confidence. It may not be copied (in whole or in part), disclosed to others or used for manufacturing, without the prior written consent of TRW Automotive Inc.
© TRW Automotive Inc. 2006

5.4.49 Het 2 Periodic Interrupt Failure (Only use for ESC)

DTC Code	Fault symptom	Condition for recog-nition	Reason for fault	Detection rules	Detection time	Latch type	System response	Driver notification -------- PFV (Yes/No)	Remarks
510A	00	Ignition On, Continuous Failsafe	***The interrupt corresponding to the solenoid feedback is miss-ing*** ***Defective microprocessor***	**NHet Periodic Interrupt Failure Fault:** The logic dealing with this type of functional operation verifies that one particular high end timer interrupt occur very pass through the schedule. This check can only be performed on interrupts that happen periodically regardless of system out-put. To minimize impact on RAM and ROM usage, as well as NHET memory usage, this logic use a periodic type interrupt that already exists. In this case the current software design requires sampling of the solenoid feedbacks after a given amount of time to allow the solenoid feedbacks to settle. To do this, an interrupt (one shot interrupt) is created to take a snap shot of the solenoid feedbacks after a certain amount of time has elapsed. The system reads the solenoid feedbacks at periodic intervals regardless of whether or not the system is enabled.	Immediately	Ignition latched	EBD: R2 ABS: R2 TC: R2 YSC: R2 HBA: R2 EDTR: R2 Brake AC:R2 HA : R2 ITPM :R2	**Display:** **PFV:** No	None

PROPRIETARY NOTICE: This document is copyright and the property of TRW Automotive Inc. It is disclosed in confidence. It may not be copied (in whole or in part), disclosed to others or used for manufacturing, without the prior written consent of TRW Automotive Inc.
© TRW Automotive Inc. 2006

5.4.50 Het 1 Periodic Interrupt Failure

DTC Code	Fault symptom	Condition for recognition	Reason for fault	Detection rules	Detection time	Latch type	System response	Driver notification -------- PFV (Yes/No)	Remarks
510A	00	Ignition On, Continuous Failsafe	***The interrupt corresponding to the solenoid feedback is missing*** ***Defective microprocessor***	**Het Periodic Interrupt Failure Fault:** The logic dealing with this type of functional operation verifies that one particular high end timer interrupt occur very pass through the schedule. This check can only be performed on interrupts that happen periodically regardless of system output. To minimize impact on RAM and ROM usage, as well as HET memory usage, this logic use a periodic type interrupt that already exists. In this case the current software design requires sampling of the solenoid feedbacks after a given amount of time to allow the solenoid feedbacks to settle. To do this, an interrupt (one shot interrupt) is created to take a snap shot of the solenoid feedbacks after a certain amount of time has elapsed. The system reads the solenoid feedbacks at periodic intervals regardless of whether or not the system is enabled..	Immediately	Ignition latched	EBD: R2 ABS: R2 TC: R2 YSC: R2 HBA: R2 EDTR: R2 Brake AC:R2 HA : R2 ITPM :R2	**Display:** **PFV:** No	None

PROPRIETARY NOTICE: This document is copyright and the property of TRW Automotive Inc. It is disclosed in confidence. It may not be copied (in whole or in part), disclosed to others or used for manufacturing, without the prior written consent of TRW Automotive Inc.
© TRW Automotive Inc. 2006

5.4.51 Het1 Watchdog Timeout (Only use for ESC)

DTC Code	Fault symptom	Condition for recog-nition	Reason for fault	Detection rules	Detection time	Latch type	System response	Driver notification -------- PFV (Yes/No)	Remarks
510A	00	Ignition On, Continuous Failsafe	***HET monitor task is not executed within the allowed time frame Defective microprocessor***	**NHet Watchdog Timeout Fault:** The first instruction of the NHET program shall contain a DJZ (Decrement and Jump if Zero) instruction. During each NHET program loop, this instruction will decrement its counter, if it is greater than zero. As long as the counter remains above zero, this instruction will branch to the main NHET program. In the event that the counter should reach zero, an interrupt is generated and the NHET program will branch to the second instruction. The second instruction of the NHET program contains a BR (Branch) instruction that branches to the first instruction. The scheduled NHET monitor task will be responsible for setting the counter value, of the DJZ instruction, to a value that will not expire between scheduled NHET monitor tasks. This value should correspond to the task rate plus an expected jitter amount. As long as the NHET monitor task is executed at the allowed rate, the counter of the DJZ instruction will not decrement to zero. If the NHET monitor task is not executed within the allowed time frame, the counter of the DJZ instruction will decrement to zero and the fault will be set.	Immediately	Ignition latched	EBD: R2 ABS: R2 TC: R2 YSC: R2 HBA: R2 EDTR: R2 Brake AC:R2 HA : R2 ITPM :R2	**Display:** **PFV:** No	None

PROPRIETARY NOTICE: This document is copyright and the property of TRW Automotive Inc. It is disclosed in confidence. It may not be copied (in whole or in part), disclosed to others or used for manufacturing, without the prior written consent of TRW Automotive Inc.
© TRW Automotive Inc. 2006

5.4.52 Het2 Watchdog Timeout

DTC Code	Fault symptom	Condition for recog-nition	Reason for fault	Detection rules	Detection time	Latch type	System response	Driver notification -------- PFV (Yes/No)	Remarks
510A	00	Ignition On, Continuous Failsafe	***HET monitor task is not executed within the allowed time frame Defective microprocessor r***	**Het Watchdog Timeout Fault:** The first instruction of the HET program shall contain a DJZ (Decrement and Jump if Zero) instruction. During each HET program loop, this instruction will decrement its counter, if it is greater than zero. As long as the counter remains above zero, this instruction will branch to the main HET program. In the event that the counter should reach zero, an interrupt is generated and the HET program will branch to the second instruction. The second instruction of the HET program contains a BR (Branch) instruction that branches to the first instruction. The scheduled HET monitor task will be responsible for setting the counter value, of the DJZ instruction, to a value that will not expire between scheduled HET monitor tasks. This value should correspond to the task rate plus an expected jitter amount. As long as the HET monitor task is executed at the allowed rate, the counter of the DJZ instruction will not decrement to zero. If the HET monitor task is not executed within the allowed time frame, the counter of the DJZ instruction will decrement to zero and the fault will be set.	Immediately	Ignition latched	EBD: R2 ABS: R2 TC: R2 YSC: R2 HBA: R2 EDTR: R2 Brake AC:R2 HA : R2 ITPM :R2	**Display:** **PFV:** No	None

PROPRIETARY NOTICE: This document is copyright and the property of TRW Automotive Inc. It is disclosed in confidence. It may not be copied (in whole or in part), disclosed to others or used for manufacturing, without the prior written consent of TRW Automotive Inc.
© TRW Automotive Inc. 2006

5.4.53 Het 2 Program Error

DTC Code	Fault symptom	Condition for recognition	Reason for fault	Detection rules	Detection time	Latch type	System response	Driver notification -------- PFV (Yes/No)	Remarks
510A	00	Ignition On, Continuous Failsafe	***Fault HET code (Execution of default instruction) Defective microprocessorr***	**Het Program Error Fault:** At the completion of the High End Timer RAM check, the entire HET program should be filled with default program until the actual program is loaded. This program is comprised of count instructions that are upper limited to data field size to zero. These instructions branch back to the beginning of the HET program. After the actual HET program is loaded, only the unused program instructions will contain these default count instructions. Execution of the HET program should be limited to the actual instructions of the HET program. The scheduled HET monitor task will be responsible for checking the data fields of these default instructions to determine if any of these count instructions have been executed. If any of these default instructions have been executed, the data field will contain a value other than zero. If a value other than zero is detected, the data field is set to zero and the fault manager is notified that the monitor has failed. To minimize execution time and the impact of accessing the HET RAM, only one data field shall be tested each update.	Immediately	Ignition latched	EBD: R2 ABS: R2 TC: R2 YSC: R2 HBA: R2 EDTR: R2 Brake AC:R2 HA : R2 ITPM :R2	**Display:** **PFV:** No	None

PROPRIETARY NOTICE: This document is copyright and the property of TRW Automotive Inc. It is disclosed in confidence. It may not be copied (in whole or in part), disclosed to others or used for manufacturing, without the prior written consent of TRW Automotive Inc.
© TRW Automotive Inc. 2006

5.4.54 Het1 Program Overflow (Only use for ESC)

DTC Code	Fault symptom	Condition for recog-nition	Reason for fault	Detection rules	Detection time	Latch type	System response	Driver notification -------- PFV (Yes/No)	Remarks
510A	00	Ignition On, Continuous Failsafe	***- Incorrect NHET code in current application*** ***-Defective microprocessor***	**NHet Program Overflow Fault:** To detect this condition, during initialization of the NHET, the program overflow interrupt enable is set and the program overflow interrupt is configured as a high priority interrupt. When a program overflow occurs (NHET program does not complete execution time within one NHET loop time) , the NHET will generate a program overflow interrupt. The interrupt service routine associated with the program overflow interrupt will set fault and will disable the NHET program overflow interrupt.	Immediately	Ignition latched	EBD: R2 ABS: R2 TC: R2 YSC: R2 HBA: R2 EDTR: R2 Brake AC:R2 HA : R2 ITPM :R2	**Display:** **PFV:** No	None

PROPRIETARY NOTICE: This document is copyright and the property of TRW Automotive Inc. It is disclosed in confidence. It may not be copied (in whole or in part), disclosed to others or used for manufacturing, without the prior written consent of TRW Automotive Inc.
© TRW Automotive Inc. 2006

5.4.55 Het2 Program Overflow

DTC Code	Fault symptom	Condition for recog-nition	Reason for fault	Detection rules	Detection time	Latch type	System response	Driver notification -------- PFV (Yes/No)	Remarks
510A	00	Ignition On, Continuous Failsafe	***Incorrect HET code in current application Defective microprocessor***	**Het Program Overflow Fault:** To detect this condition, during initialization of the High End Timer, the program overflow interrupt enable is set and the program overflow interrupt is configured as a high priority interrupt. When a program overflow occurs (HET program does not complete execution time within one HET loop time), the HET will generate a program overflow interrupt. The interrupt service routine associated with the program overflow interrupt will set fault and will disable the HET program overflow interrupt.	Immediately	Ignition latched	EBD: R2 ABS: R2 TC: R2 YSC: R2 HBA: R2 EDTR: R2 Brake AC:R2 HA : R2 ITPM :R2	**Display:** **PFV:** No	None

PROPRIETARY NOTICE: This document is copyright and the property of TRW Automotive Inc. It is disclosed in confidence. It may not be copied (in whole or in part), disclosed to others or used for manufacturing, without the prior written consent of TRW Automotive Inc.
© TRW Automotive Inc. 2006

5.4.56 Het1 control Register failure (Only use for ESC)

DTC Code	Fault symptom	Condition for recog-nition	Reason for fault	Detection rules	Detection time	Latch type	System response	Driver notification -------- PFV (Yes/No)	Remarks
510A	00	Ignition On, Continuous Failsafe	***stuck bit(s) in NHET registers***	**NHet Register failure Fault:** During initialization, the NHET registers will be configured. The contents are read back and verified to compare them against the desired values. If there are any mismatches, this fault is set.	Immediately	Ignition latched	EBD: R2 ABS: R2 TC: R2 YSC: R2 HBA: R2 EDTR: R2 Brake AC:R2 HA : R2 ITPM :R2	**Display:** **PFV:** No	None

PROPRIETARY NOTICE: This document is copyright and the property of TRW Automotive Inc. It is disclosed in confidence. It may not be copied (in whole or in part), disclosed to others or used for manufacturing, without the prior written consent of TRW Automotive Inc.
© TRW Automotive Inc. 2006

5.4.57 Het2 control Register failure

DTC Code	Fault symptom	Condition for recog-nition	Reason for fault	Detection rules	Detection time	Latch type	System response	Driver notification -------- PFV (Yes/No)	Remarks
510A	00	Ignition On, Continuous Failsafe	***stuck bit(s) in HET registers***	**Het Register failure Fault:** During initialization, the HET registers will be configured. The contents are read back and verified to compare them against the desired values. If there are any mismatches, this fault is set.	Immediately	Ignition latched	EBD: R2 ABS: R2 TC: R2 YSC: R2 HBA: R2 EDTR: R2 Brake AC:R2 HA : R2 ITPM :R2	**Display:** **PFV:** No	None

PROPRIETARY NOTICE: This document is copyright and the property of TRW Automotive Inc. It is disclosed in confidence. It may not be copied (in whole or in part), disclosed to others or used for manufacturing, without the prior written consent of TRW Automotive Inc.
© TRW Automotive Inc. 2006

5.4.58 Failsafe Micro M3 Calculate Different Velocity

DTC Code	Fault symptom	Condition for recog-nition	Reason for fault	Detection rules	Detection time	Latch type	System response	Driver notification -------- PFV (Yes/No)	Remarks
510A	00	Ignition On, Continuous Failsafe	***- At least for one wheel the velocity calculation be-tween both cores is failed*** ***-Defective microprocessor***	**Mismatched velocity calculation between both core Fault:** Both the r4 core and from this independent the m3 core are calculating the velocity for each wheel. All four wheel speeds computed by the r4 core are transmitted to the m3 core each 5 ms loop. The m3 core compares them to the appropriate velocities received from the r4 core. If the tolerance of any of these wheel velocity calculations is greater than +/- 10 km/h for three more loops the fault is set. High wheel acceleration inhibits this routine.	Immediately	Ignition latched	EBD: R2 ABS: R2 TC: R2 YSC: R2 HBA: R2 EDTR: R2 Brake AC:R2 HA : R2 ITPM :R2	**Display:** **PFV:** No	None

PROPRIETARY NOTICE: This document is copyright and the property of TRW Automotive Inc. It is disclosed in confidence. It may not be copied (in whole or in part), disclosed to others or used for manufacturing, without the prior written consent of TRW Automotive Inc.
© TRW Automotive Inc. 2006

5.4.59 Failsafe Micro M3 communication failure M3 (Only use for ESC)

DTC Code	Fault symptom	Condition for recog-nition	Reason for fault	Detection rules	Detection time	Latch type	System response	Driver notification -------- PFV(Yes/No)	Remarks
510A	00	Ignition On, Continuous Failsafe	***µC defect*** ***RTOS Failure***	**FSMC communication failure M3 Fault:** The FSMC communication execution between both cores is monitored with counters. The Fault is set if three communications lost.	immediately	Ignition latched	EBD: R2 ABS: R2 TC: R2 YSC: R2 HBA: R2 EDTR: R2 Brake AC:R2 HA : R2 ITPM :R2	**Display:** **PFV:** No	None

PROPRIETARY NOTICE: This document is copyright and the property of TRW Automotive Inc. It is disclosed in confidence. It may not be copied (in whole or in part), disclosed to others or used for manufacturing, without the prior written consent of TRW Automotive Inc.
© TRW Automotive Inc. 2006

5.4.60 Failsafe micro M3 failure R4(Only use for ESC)

DTC Code	Fault symptom	Condition for recog-nition	Reason for fault	Detection rules	Detection time	Latch type	System response	Driver notification -------- PFV(Yes/No)	Remarks
510A	00	Ignition On, Continuous Failsafe	***µC defect*** ***RTOS Failure***	**FSMC communication failure R4 Fault:** The FSMC communication execution between both cores is monitored with counters. The Fault is set if three communications lost.	immediately	Ignition latched	EBD: R2 ABS: R2 TC: R2 YSC: R2 HBA: R2 EDTR: R2 Brake AC:R2 HA : R2 ITPM :R2	**Display:** **PFV:** No	None

PROPRIETARY NOTICE: This document is copyright and the property of TRW Automotive Inc. It is disclosed in confidence. It may not be copied (in whole or in part), disclosed to others or used for manufacturing, without the prior written consent of TRW Automotive Inc.
© TRW Automotive Inc. 2006

5.4.61 FM communication failure M3 (Only use for ESC)

DTC Code	Fault symptom	Condition for recog-nition	Reason for fault	Detection rules	Detection time	Latch type	System response	Driver notification -------- PFV(Yes/No)	Remarks
510A	00	Ignition On, Continuous Failsafe	***µC defect*** ***RTOS Failure***	**FM communication failure M3 Fault:** The FM communication execution between both cores is monitored with counters. The Fault is set if three communications lost..	immediately	Ignition latched	EBD: R2 ABS: R2 TC: R2 YSC: R2 HBA: R2 EDTR: R2 Brake AC:R2 HA : R2 ITPM :R2	**Display:** **PFV:** No	None

PROPRIETARY NOTICE: This document is copyright and the property of TRW Automotive Inc. It is disclosed in confidence. It may not be copied (in whole or in part), disclosed to others or used for manufacturing, without the prior written consent of TRW Automotive Inc.
© TRW Automotive Inc. 2006

5.4.62 FM communication failure R4 (Only use for ESC)

DTC Code	Fault symptom	Condition for recog-nition	Reason for fault	Detection rules	Detection time	Latch type	System response	Driver notification -------- PFV (Yes/No)	Remarks
510A	00	Ignition On, Continuous Failsafe	***µC defect*** ***RTOS Failure***	**FM communication failure R4 Fault:** The FM communication execution between both cores is monitored with counters. The Fault is set if three communications lost..	immediately	Ignition latched	EBD: R2 ABS: R2 TC: R2 YSC: R2 HBA: R2 EDTR: R2 Brake AC:R2 HA : R2 ITPM :R2	**Display:** **PFV:** No	None

PROPRIETARY NOTICE: This document is copyright and the property of TRW Automotive Inc. It is disclosed in confidence. It may not be copied (in whole or in part), disclosed to others or used for manufacturing, without the prior written consent of TRW Automotive Inc.
© TRW Automotive Inc. 2006

5.4.63 ICC TIMEOUT R4 (Only use for ESC)

DTC Code	Fault symptom	Condition for recognition	Reason for fault	Detection rules	Detection time	Latch type	System response	Driver notification -------- PFV (Yes/No)	Remarks
510A	00	Ignition On, Continuous Failsafe	***-Defective controller*** ***-Replace controller***	This fault has to be logged when there is synchronisation timeout while exchanging the data between M3 and R4.	Immediately	Ignition latched	EBD: R2 ABS: R2 TC: R2 YSC: R2 HBA: R2 EDTR: R2 Brake AC:R2 HA : R2 ITPM :R2	**Display:** **PFV:** No	None

PROPRIETARY NOTICE: This document is copyright and the property of TRW Automotive Inc. It is disclosed in confidence. It may not be copied (in whole or in part), disclosed to others or used for manufacturing, without the prior written consent of TRW Automotive Inc.
© TRW Automotive Inc. 2006

5.4.64 ICC TIMEOUT Fault M3 (Only use for ESC)

DTC Code	Fault symptom	Condition for recognition	Reason for fault	Detection rules	Detection time	Latch type	System response	Driver notification -------- PFV (Yes/No)	Remarks
510A	00	Ignition On, Continuous Failsafe	***-Defective controller*** ***-Replace controller***	This fault has to be logged when there is synchronisation timeout while exchanging the data between M3 and R4.	Immediately	Ignition latched	EBD: R2 ABS: R2 TC: R2 YSC: R2 HBA: R2 EDTR: R2 Brake AC:R2 HA : R2 ITPM :R2	**Display:** **PFV:** No	None

PROPRIETARY NOTICE: This document is copyright and the property of TRW Automotive Inc. It is disclosed in confidence. It may not be copied (in whole or in part), disclosed to others or used for manufacturing, without the prior written consent of TRW Automotive Inc.
© TRW Automotive Inc. 2006

5.5 Power Supply Faults

5.5.1 System Voltage Low

DTC Code	Fault symptom	Condition for recognition	Reason for fault	Detection rules	Detection time	Latch type	System response	Driver notification -------- PFV(Yes/No)	Remarks
523F	16	Ignition On, Continuous Failsafe	***-System Voltage Supply is providing low system voltage levels.*** ***-Defective wiring.*** ***-Defective printed circuit board.***	**System Voltage Low Fault:** This fault will be set if the system voltage is less than 8.5 V for 100 msec. If the fault is latched and the system voltage rise above 9.0 V this fault will be cleared.	100msec	Condition latched	EBD: R0 ABS: R2 TC: R2 YSC: R2 HBA: R2 EDTR: R2 Brake AC:R0 HA : R2 ITPM :R0	**Display:** **PFV:** No	

PROPRIETARY NOTICE: This document is copyright and the property of TRW Automotive Inc. It is disclosed in confidence. It may not be copied (in whole or in part), disclosed to others or used for manufacturing, without the prior written consent of TRW Automotive Inc.
© TRW Automotive Inc. 2006

5.5.2 System Voltage Excessive Low

DTC Code	Fault symptom	Condition for recog-nition	Reason for fault	Detection rules	Detection time	Latch type	System response	Driver notification -------- PFV (Yes/No)	Remarks
523F	16	Ignition On, Continuous Failsafe	***System Voltage Supply is provid-ing excessive low system voltage levels.*** ***- Defective wiring.*** ***-Defective printed circuit board.***	**System Voltage Excessive Low Fault:** This fault will be set if the system voltage is lower than 7.5 V for 25 msec. If the fault is latched and the system voltage rises above 8.0 V this fault will be cleared.	25msec	Condition latched	EBD: R2 ABS: R2 TC: R2 YSC: R2 HBA: R2 EDTR: R2 Brake AC:R2 HA : R2 ITPM :R2	**Display:** **PFV:** No	

PROPRIETARY NOTICE: This document is copyright and the property of TRW Automotive Inc. It is disclosed in confidence. It may not be copied (in whole or in part), disclosed to others or used for manufacturing, without the prior written consent of TRW Automotive Inc.
© TRW Automotive Inc. 2006

5.5.3 System Voltage High

DTC Code	Fault symptom	Condition for recog-nition	Reason for fault	Detection rules	Detection time	Latch type	System response	Driver notification -------- PFV (Yes/No)	Remarks
523F	17	Ignition On, Continuous Failsafe	***-System Voltage Supply is provid-ing high system voltage levels.*** ***-Defective wiring.*** ***-Defective printed circuit board.***	**System Voltage High Fault:** This fault will be set if the system voltage is higher than 16.5 V for 100 msec and will be cleared if voltage is below 16.0V for 100msec.	100msec	Condition latched	EBD: R0 ABS: R2 TC: R2 YSC: R2 HBA: R2 EDTR: R2 Brake AC:R0 HA : R2 ITPM :R0	**Display:** **PFV:** No	Adidtionally CAN INVALID INPUTS fault is ob-served.

PROPRIETARY NOTICE: This document is copyright and the property of TRW Automotive Inc. It is disclosed in confidence. It may not be copied (in whole or in part), disclosed to others or used for manufacturing, without the prior written consent of TRW Automotive Inc.
© TRW Automotive Inc. 2006

5.5.4 System Voltage Excessively High

DTC Code	Fault symptom	Condition for recognition	Reason for fault	Detection rules	Detection time	Latch type	System response	Driver notification -------- PFV (Yes/No)	Remarks
523F	17	*Ignition On, Continuous Failsafe*	***-System Voltage Supply is providing excessive high system voltage levels.*** ***- Defective wiring.*** ***-Defective printed circuit board.***	**System Voltage Excessive High Fault:** This fault will be set if the system voltage is greater than 18.50 V for 25 msec will be cleared if voltage is below 18.0V.	*25msec*	Condition latched	EBD: R2 ABS: R2 TC: R2 YSC: R2 HBA: R2 EDTR: R2 Brake AC:R2 HA : R2 ITPM :R2	**Display:** **PFV:** No	Adidtionally CAN,WSS INVALID INPUTS fault is observed.

PROPRIETARY NOTICE: This document is copyright and the property of TRW Automotive Inc. It is disclosed in confidence. It may not be copied (in whole or in part), disclosed to others or used for manufacturing, without the prior written consent of TRW Automotive Inc.
© TRW Automotive Inc. 2006

5.5.5 System Voltage Erratic (Only use for ESC)

DTC Code	Fault symptom	Condition for recog-nition	Reason for fault	Detection rules	Detection time	Latch type	System response	Driver notification -------- PFV(Yes/No)	Remarks
523F	2F	Ignition On, Continuous Failsafe	***-System Voltage Supply is provid-ing High system voltage levels.*** ***-Defective wiring.*** ***-Defective printed circuit board***	**Ignition Voltage Erratic High** ***Fault Identifier:*** **SYSTEM_VOLTAGE_ERRATIC** This fault will be set if the high voltage fault is not latched and the system voltage continuously toggles between Normal Voltage and High voltage for 200msec. If it is in normal range for nearly 1000msec or if a high voltage fault latches then it recovers.	~200 msecs	Condition latched	EBD: R0 ABS: R2 TC: R2 YSC: R2 HBA: R2 EDTR: R2 Brake AC:R0 HA : R2 ITPM :R2	**Display:** **PFV:** No	.

PROPRIETARY NOTICE: This document is copyright and the property of TRW Automotive Inc. It is disclosed in confidence. It may not be copied (in whole or in part), disclosed to others or used for manufacturing, without the prior written consent of TRW Automotive Inc.
© TRW Automotive Inc. 2006

5.6 ECU Faults

5.6.1 Internal 5 V Sensor Supply failure

DTC Code	Fault symptom	Condition for recognition	Reason for fault	Detection rules	Detection time	Latch type	System response	Driver notification -------- PFV (Yes/No)	Remarks
5200	49	Ignition On, Continuous Failsafe	***Defective internal 5 volt supply circuit*** ***-Defective printed circuit board*** ***-Defective microprocessor feedback input port***	**Internal 5 V Sensor Supply failure Fault:** If the internal 5V supply voltage feedback indicates that the voltage level is less than 4.75 V or greater than 5.25 V for more than 30 msec, the fault is set.	30msec	Ignition latched	EBD: R2 ABS: R2 TC: R2 YSC: R2 HBA: R2 EDTR: R2 BrakeAC:R2 HA: R2 ITPM:R2	**Display:** **PFV:** Yes	None

PROPRIETARY NOTICE: This document is copyright and the property of TRW Automotive Inc. It is disclosed in confidence. It may not be copied (in whole or in part), disclosed to others or used for manufacturing, without the prior written consent of TRW Automotive Inc.
© TRW Automotive Inc. 2006

5.6.2 Internal 5 V Sensor Supply Erratic

DTC Code	Fault symptom	Condition for recog-nition	Reason for fault	Detection rules	Detection time	Latch type	System response	Driver notification -------- PFV (Yes/No)	Remarks
5200	49	Ignition On, Continuous Failsafe	- ***Sporadical open circuit of 5V printout*** ***- Sporadical short circuit of pres-sure sensor sup-ply to ground*** ***- System ASIC fault***	**Internal 5 V Sensor Supply erratic Fault:** The internal 5V are continoulsy monitored. Is the last fault status different to the current fault status this fault will in-crement. Is the last staus and the current status equally this fault will decrement. The increment is 50 time faster than the decrement. With this monitor it is shure that many short fault pulses are detected as a latched fault.	160msec	Ignition latched	EBD: R2 ABS: R2 TC: R2 YSC: R2 HBA: R2 EDTR: R2 BrakeAC:R2 HA: R2 ITPM:R2	**Display:** **PFV:** Yes	None

PROPRIETARY NOTICE: This document is copyright and the property of TRW Automotive Inc. It is disclosed in confidence. It may not be copied (in whole or in part), disclosed to others or used for manufacturing, without the prior written consent of TRW Automotive Inc.
© TRW Automotive Inc. 2006

5.6.3 SPI Failure

DTC Code	Fault symptom	Condition for recog-nition	Reason for fault	Detection rules	Detection time	Latch type	System response	Driver notification -------- PFV(Yes/No)	Remarks
E018	00	Ignition On, Continuous Failsafe	- ***Defective printed circuit board.*** ***-Defective System ASIC.*** ***-Defective microprocessor***	**SPI_FAILURE** **SPI Failure Fault:** 2 data bytes are sent to the System ASIC. The System sends back the first byte, if the sent data does not match then the microprocessor does a retry. If after 3 retries the data was not received correctly, the fault is set.	Immediately	Ignition latched	EBD: R2 ABS: R2 TC: R2 YSC: R2 HBA: R2 EDTR: R2 BrakeAC:R2 HA: R2 ITPM:R2	**Display:** **PFV:** No	None

PROPRIETARY NOTICE: This document is copyright and the property of TRW Automotive Inc. It is disclosed in confidence. It may not be copied (in whole or in part), disclosed to others or used for manufacturing, without the prior written consent of TRW Automotive Inc.
© TRW Automotive Inc. 2006

5.6.4 NVRAM Chip not operational

DTC Code	Fault symptom	Condition for recog-nition	Reason for fault	Detection rules	Detection time	Latch type	System response	Driver notification -------- PFV (Yes/No)	Remarks
E001	42	Ignition On, Continuous Failsafe	***Defective NVRAM. blocked SPI***	**NVRAM_DEVICE_INOPERATIVE** **NVRAM Chip not operational Fault:** This fault is checked during system initialization, on de-mand nvram writes and nvram writes prior to shutdown.	Immediately	Ignition latched	EBD: R2 ABS: R2 TC: R2 YSC: R2 HBA: R2 EDTR: R2 BrakeAC:R2 HA: R2 ITPM:R2	**Display:** **PFV:** No	None

PROPRIETARY NOTICE: This document is copyright and the property of TRW Automotive Inc. It is disclosed in confidence. It may not be copied (in whole or in part), disclosed to others or used for manufacturing, without the prior written consent of TRW Automotive Inc.
© TRW Automotive Inc. 2006

5.6.5 NVRAM Chip INFORMATION FAILURE

DTC Code	Fault symptom	Condition for recog-nition	Reason for fault	Detection rules	Detection time	Latch type	System response	Driver notification -------- PFV (Yes/No)	Remarks
E001	42	Ignition On, Continuous Failsafe	***Defective NVRAM. blocked SPI***	**NVRAM_WRITE_FAILURE** **NVRAM Chip information failure** Data written into NVRAM is read back after each access. If this data does not match the original one, the write access is repeated. If more than 3 consecutive tries are failing, this fault is set	Immediately	Ignition latched	EBD: R0 ABS: R0 TC: R2 YSC: R2 HBA: R2 EDTR: R2 BrakeAC:R0 HA: R2 ITPM:R2	**Display:** **PFV:** Yes	None

PROPRIETARY NOTICE: This document is copyright and the property of TRW Automotive Inc. It is disclosed in confidence. It may not be copied (in whole or in part), disclosed to others or used for manufacturing, without the prior written consent of TRW Automotive Inc.
© TRW Automotive Inc. 2006

5.6.6 NVRAM Reset Ongoing

DTC Code	Fault symptom	Condition for recog-nition	Reason for fault	Detection rules	Detection time	Latch type	System response	Driver notification -------- PFV (Yes/No)	Remarks
FFFF	FF	Ignition On, Continuous Failsafe	***NVRAM reset request via diagnosis received.***	**NVRAM_RESET_ONGOING** **NVRAM Reset Ongoing Fault:** The fault is set if the routines to reset the NVRAM is received via diagnostic command.	Immediately	Ignition latched	EBD: R0 ABS: R0 TC: R2 YSC: R2 HBA: R2 EDTR: R2 BrakeAC:R0 HA: R2 ITPM:R2	Display: PFV: No	

PROPRIETARY NOTICE: This document is copyright and the property of TRW Automotive Inc. It is disclosed in confidence. It may not be copied (in whole or in part), disclosed to others or used for manufacturing, without the prior written consent of TRW Automotive Inc.
© TRW Automotive Inc. 2006

5.6.7 Acceleration Sensor SPI not operational (Only use for ESC)

DTC Code	Fault symptom	Condition for recog-nition	Reason for fault	Detection rules	Detection time	Latch type	System response	Driver notification -------- PFV (Yes/No)	Remarks
E018	00	Ignition On, Continuous Failsafe	***Defective Acel Sensor. Defective printed circuit board. Defective micro-processor.***	**SPI_ACCEL_INOPERATIVE** **Acceleration Sensor SPI not operational Fault:** Failsafe that determines if a condition is present that indicates a failure communicating with the accelerometer. This can be set by several different conditions that indicate a transmission error. This can be triggered by a SPI driver error, or error reported by the device.	100 msecs	Condition latched	EBD: R0 ABS: R0 TC: R0 YSC: R2 HBA: R0 EDTR: R0 BrakeAC:R0 HA: R2 ITPM: R2	**Display:** **PFV:** Yes	None

PROPRIETARY NOTICE: This document is copyright and the property of TRW Automotive Inc. It is disclosed in confidence. It may not be copied (in whole or in part), disclosed to others or used for manufacturing, without the prior written consent of TRW Automotive Inc.
© TRW Automotive Inc. 2006

5.7 Power Relay Faults

5.7.1 Open power switch for slip control

DTC Code	Fault symptom	Condition for recognition	Reason for fault	Detection rules	Detection time	Latch type	System response	Driver notification -------- PFV (Yes/No)	Remarks
527A	12	Ignition On, Continuous Failsafe	***- Defective fail-safe relay*** ***- System ASIC fault*** ***- Broken cicuit on the PCB*** ***- ADC fault***	**PWR_SW_SLIP_CONTROL_OPEN** **Open power switch for slip control Fault:** Vehicle battery voltage is applied to the high side of the solenoid coils in the hydraulic assembly by the power switch. This voltage level is monitored by the microprocessor. When the power switch has been commanded on the voltage level is monitored for proper operation. If the voltage level (switched battery) is less than 80 % of the measured system voltage for more than 50 msec an open Power Switch fault is set. This test is performed continuously as long as the power switch is commanded on. This test should fail if the external watchdog is disabled.	50msec	Ignition latched	EBD: R2 ABS: R2 TC: R1 YSC: R2 HBA: R2 EDTR: R2 Brake AC:R2 HA : R2 ITPM : R0	**Display:** **PFV:** Yes	None

PROPRIETARY NOTICE: This document is copyright and the property of TRW Automotive Inc. It is disclosed in confidence. It may not be copied (in whole or in part), disclosed to others or used for manufacturing, without the prior written consent of TRW Automotive Inc.
© TRW Automotive Inc. 2006

5.7.2 Shorted power switch for slip control

DTC Code	Fault symptom	Condition for recognition	Reason for fault	Detection rules	Detection time	Latch type	System response	Driver notification -------- PFV (Yes/No)	Remarks
527A	12	Ignition On, Continuous Failsafe	***-Defective power switch (contacts shorted closed).*** ***- Defective printed circuit board (feedback shorted to voltage supply).*** ***- Defective power switch driver.*** ***-Anything that keeps the solenoid supply voltage high when the power switch is commanded off.***	**PWR_SW_SLIP_CONTROL_SHORT** **Shorted power switch for slip control Fault:** Vehicle battery voltage is applied to the high side of the solenoid coils in the hydraulic assembly by the power switch. This voltage level is monitored by the microcontroller. When the power switch has been commanded off the voltage level should be at or near zero volts. If the voltage level (switched battery) is greater than 80 % of the measured system voltage for more than 50 msec a shorted Power Switch fault will be set. This test is performed once after powering up the system and also only when the power switch has been commanded off (unusual).	50msec	Ignition latched	EBD: R0 ABS: R2 TC: R1 YSC: R2 HBA: R2 EDTR: R0 Brake AC:R0 HA : R2 ITPM :R0	**Display:** **PFV:** Yes	None

PROPRIETARY NOTICE: This document is copyright and the property of TRW Automotive Inc. It is disclosed in confidence. It may not be copied (in whole or in part), disclosed to others or used for manufacturing, without the prior written consent of TRW Automotive Inc.
© TRW Automotive Inc. 2006

5.8 Steering Angle Sensor Faults

5.8.1 Steering wheel angle offset error

DTC Code	Fault symptom	Condition for recog-nition	Reason for fault	Detection rules	Detection time	Latch type	System response	Driver notification -------- PFV (Yes/No)	Remarks
4051	22	SWA is valid	***-Electronic or mechanical fault in sensor*** ***- Mechanical at-tachment of the sensor*** ***-Incorrect wheel geometry***	**SAS offset fault** The SWA signal shows an offset out of specification. The fault is set under the following conditions: 1. SWA is valid 2. Yaw Rate, Lat Acc and wheel speed information are valid 3. Vehicle speed > 4.2 m/sec 4. Stable forward driving 5. a: The difference between the first learned offset and the stored end of line offset from NVRAM > 36 deg for 1.5 sec before the initialization OR b: The difference between the learned offset and the stored end of line offset from NVRAM > 18 deg for 3 sec before the initialization OR c: 4 continuously learned offsets are > 18 deg during straight line driving for 40msec after the initialization Before initialization: Offset = Difference between the measured SWA and the estimated SWA. The estimated SWA is a function of Yaw Rate and vehicle speed. After initialization: Offset = Deviation of the measured SWA from zero during straight driving for a certain distance. Counter Behavior: Up: 1,2,3,4,5(a or b or c) fulfilled Down: 1,2,3,4 fulfilled and 5c not fulfilled anymore Hold: 2 or 3 or 4 not fulfilled (no offset learned by zeroing) Reset: 1 not fulfilled	See detection rules	Ignition latched	EBD: R0 ABS: R0 TC: R1 YSC: R2 HBA: R2 EDTR: R0 Brake AC:R0 HA : R2 ITPM :R2	**Display:** **PFV:** Yes	None

PROPRIETARY NOTICE: This document is copyright and the property of TRW Automotive Inc. It is disclosed in confidence. It may not be copied (in whole or in part), disclosed to others or used for manufacturing, without the prior written consent of TRW Automotive Inc.
© TRW Automotive Inc. 2006

5.8.2 Steering wheel angle raw offset error

DTC Code	Fault symptom	Condition for recog-nition	Reason for fault	Detection rules	Detection time	Latch type	System response	Driver notification -------- PFV(Yes/No)	Remarks
4051	22	SWA is valid	***- Electronic or mechanical fault in sensor*** ***-Mechanical at-tachment of the sensor*** ***- Incorrect wheel geometry***	**SAS raw offset fault** The SWA signal has to show an implausible high value before the initialization. The fault is set under the following conditions: 1. Yaw Rate, wheel speed information and SWA are valid 2. Vehicle-speed > =4.2 m/sec 3. The absolute value of Yaw Rate is < =5 deg/sec 4. The absolute values of the SWA signal (zeroed) and the difference between the measured SWA signal and the estimated SWA are > 175 deg for 2 seconds 5. Wheel Speed difference between front and rear axle <=0.5m/sec 6. Swa enabled timer >= 0.2 seconds Counter Behavior: Up: 1,2,3,4 fulfilled Reset: 1 or 2 or 3 not fulfilled or detecting to passing or passing to detecting	2sec	Ignition latched	EBD: R0 ABS: R0 TC: R1 YSC: R2 HBA: R0 EDTR: R0 Brake AC:R0 HA : R2 ITPM :R2	**Display:** **PFV:** Yes	None

PROPRIETARY NOTICE: This document is copyright and the property of TRW Automotive Inc. It is disclosed in confidence. It may not be copied (in whole or in part), disclosed to others or used for manufacturing, without the prior written consent of TRW Automotive Inc.
© TRW Automotive Inc. 2006

5.8.3 Steering wheel angle range error

DTC Code	Fault symptom	Condition for recog-nition	Reason for fault	Detection rules	Detection time	Latch type	System response	Driver notification -------- PFV(Yes/No)	Remarks
4051	22	SWA is valid	***-Electronic or mechanical fault in sensor*** ***-Mechanical at-tachment of the sensor*** ***-Incorrect wheel geometry***	**Steering wheel angle max value error:** The SWA signal shows a greater value than physically possi-ble in the vehicle. The fault is set under the following conditions: INHIBIT CONDITIONS: 1. SWA not valid. ENABLE CONDITIONS: FAULT DETECTION CONDITIONS: 2. Absolute SWA sensor: The absolute value of the (turn corrected) signal has to be > 720 deg for 200 msec. This fault is passed if the absolute value of the SWA signal is < 720 deg (relative SWA sensor after the initialization or abso-lute SWA sensor) This fault is cleared if all SWA monitor routines have passed (in case of prior fault and ECE handling enabled). Counter Behavior: Up: 1,2fulfilled Reset: 1 not fulfilled or detecting -> passing or passing -> detecting..	200 msec	Ignition latched	EBD: R0 ABS: R0 TC: R1 YSC: R2 HBA: R0 EDTR: R0 Brake AC:R0 HA : R2 ITPM :R2	**Display:** **PFV:** Yes	None

PROPRIETARY NOTICE: This document is copyright and the property of TRW Automotive Inc. It is disclosed in confidence. It may not be copied (in whole or in part), disclosed to others or used for manufacturing, without the prior written consent of TRW Automotive Inc.
© TRW Automotive Inc. 2006

5.8.4 Steering wheel not alive error

DTC Code	Fault symptom	Condition for recog-nition	Reason for fault	Detection rules	Detection time	Latch type	System response	Driver notification -------- PFV(Yes/No)	Remarks
4051	29	SWA is valid	***Electronic or mechanical fault in sensor hard-ware***	**Steering wheel not alive error Fault:** The SWA signal does not change while the Yaw Rate changes: The fault is set under the following conditions: INHIBIT CONDITIONS: 1. Yaw Rate or SWA not valid 2. Wheel speed information not valid ENABLE CONDITIONS: 3. Vehicle speed > 2.5 m/sec 4. Difference between wheel speeds front and rear < 5 m/sec FAULT DETECTION CONDITIONS: 5. Yaw Rate has to be > 3 deg/sec once and < -3 deg/sec once 6. The Yaw Rate change has to be greater than 5 deg/sec² for 3 seconds This fault is passed if the SWA signal changes its value for 100 msec (no prior fault). This fault is cleared if all SWA monitor routines have passed (in case of prior fault and ECE handling enabled). Counter Behavior: Up: 1,2,3,4,5,6 fulfilled..	>=3sec	Ignition latched	EBD: R0 ABS: R0 TC: R1 YSC: R2 HBA: R0 EDTR: R0 Brake AC:R0 HA : R2 ITPM :R2	**Display:** **PFV:** Yes	None

PROPRIETARY NOTICE: This document is copyright and the property of TRW Automotive Inc. It is disclosed in confidence. It may not be copied (in whole or in part), disclosed to others or used for manufacturing, without the prior written consent of TRW Automotive Inc.
© TRW Automotive Inc. 2006

5.8.5 Steering wheel angle sensor gain error:

DTC Code	Fault symptom	Condition for recog-nition	Reason for fault	Detection rules	Detection time	Latch type	System response	Driver notification -------- PFV (Yes/No)	Remarks

PROPRIETARY NOTICE: This document is copyright and the property of TRW Automotive Inc. It is disclosed in confidence. It may not be copied (in whole or in part), disclosed to others or used for manufacturing, without the prior written consent of TRW Automotive Inc.
© TRW Automotive Inc. 2006

DTC Code	Fault symptom	Condition for recog-nition	Reason for fault	Detection rules	Detection time	Latch type	System response	Driver notification -------- PFV (Yes/No)	Remarks
4051	22	SWA is valid	***- Defective steering angle sensor.*** ***- Defective cable.*** ***- Defective printed circuit board.*** ***- Defective microprocessor feedback input port.***	**Steering wheel angle sensor missing calibration Fault:** *Fault Identifier:* SWA_GAIN_ERROR The monitoring recognizes offset faults as well as amplification fault. The fault is set under the following conditions: 1. Yaw Rate, Lat Acc, SWA and wheel speed information are valid and MCP must be initialized 2. Vehicle speed > 4.0 m/sec, while driving forward 3. The Tight Check is performed when driving is stable and the Loose Check is performed during marginally stable situations. **4.** The difference between the zeroed SWA signal and the estimated SWA from Yaw Rate is more than the failure threshold for 200-1000 msec. The failure threshold is based on the initialization state (initialized or not) and driving situation. Based on a function of vehicle speed, Ay and Yaw Rate the thresholds vary from 50 deg in the Tight Check to 100 deg or more in the Loose Check. The maturation time is based on magnitude of error. This fault is passed if the difference between the zeroed SWA signal and the estimated SWA is < failure threshold for 1 second (no prior fault). This fault is cleared if all SWA monitor routines have passed (in case of prior fault and ECE handling enabled). Counter Behavior: Up: 1,2,3,4 fulfilled Down: Detecting ➔ passing Hold: 1 or 2 or 3 not fulfilled	Immediately	Iginition atched	EBD: R0 ABS: R0 TC: R1 YSC: R2 HBA: R0 EDTR: R0 Brake AC:R0 HA : R2 ITPM :R2	**Display:** **PFV:** Yes	None

PROPRIETARY NOTICE: This document is copyright and the property of TRW Automotive Inc. It is disclosed in confidence. It may not be copied (in whole or in part), disclosed to others or used for manufacturing, without the prior written consent of TRW Automotive Inc.
© TRW Automotive Inc. 2006

5.8.6 Steering wheel angle step error

DTC Code	Fault symptom	Condition for recognition	Reason for fault	Detection rules	Detection time	Latch type	System response	Driver notification -------- PFV (Yes/No)	Remarks
4051	27	SWA is valid	***Electronic or mechanical fault in sensor hardware***	**Steering wheel angle step error Fault:** The SWA signal has to show a gradient above a certain threshold. The fault is set under the following conditions: INHIBIT CONDITIONS: 1. SWA not valid ENABLE CONDITIONS: SAS step fault The SWA signal has to show a gradient above a certain threshold. The fault is set under the following conditions: 1. SWA is valid 2. Wheel speed information is valid 3. Vehicle speed > 0.56 m/sec 4. Raw SWA signal change is > 3500 deg/sec (35 deg in 10 msec). In case an implausible step was detected, the next raw SWA signal is compared to the previous loop values. 5. The implausible step lasts for 3 times The fault counter is 2-up-1-down counter. If the error exists, the counter is increment by 2 else decremented by 1. Counter Behavior: Up: 1,2,3 fulfilled Down: 1 fulfilled and 2 not fulfilled Reset: 1 not fulfilled eset: 1 not fulfilled..	>50 msec	Ignition latched	EBD: R0 ABS: R0 TC: R1 YSC: R2 HBA: R0 EDTR: R0 Brake AC:R0 HA : R2 ITPM :R2	**Display:** **PFV:** Yes	None

PROPRIETARY NOTICE: This document is copyright and the property of TRW Automotive Inc. It is disclosed in confidence. It may not be copied (in whole or in part), disclosed to others or used for manufacturing, without the prior written consent of TRW Automotive Inc.
© TRW Automotive Inc. 2006

5.9 YAW Sensor Faults

5.9.1 YAW Sensor Shorted High Failure (Only use for ESC)

DTC Code	Fault symptom	Condition for recog-nition	Reason for fault	Detection rules	Detection time	Latch type	System response	Driver notification -------- PFV (Yes/No)	Remarks
4063	09	Ignition On, Continuous Failsafe	***if output of the device is shorted high***	**YAW Sensor Shorted High Failure Fault:** The circuitry that connects the output to the micro allows detection of this failure. If the output of the device is measured to be above 4.75 volts (YAW_RATE_SHRT_HI_VOLTAGE) the device is considered to be shorted high. This failsafe runs at a rate of 7 msec (ANG_RATE_SENSOR_LOW_RATE).	30msec	Ignition latched	EBD: R0 ABS: R0 TC: R0 YSC: R2 HBA: R0 EDTR: R0 BrakeAC:R0 HA : R2 ITPM: R2	**Display:** **PFV:** Yes	None

PROPRIETARY NOTICE: This document is copyright and the property of TRW Automotive Inc. It is disclosed in confidence. It may not be copied (in whole or in part), disclosed to others or used for manufacturing, without the prior written consent of TRW Automotive Inc.
© TRW Automotive Inc. 2006

5.9.2 YAW Sensor Open Or Short To Ground Failure (Only use for ESC)

DTC Code	Fault symptom	Condition for recog-nition	Reason for fault	Detection rules	Detection time	Latch type	System response	Driver notification -------- PFv(Yes/No)	Remarks
4063	09	Ignition On, Continuous Failsafe	***if output of the device is not connected to the a/d (open) or the output is shorted low.***	**YAW Sensor Open Or Short To Ground Failure Fault:** The circuitry that connects the output to the micro allows detection of this failure. If the output of the device is measured to be below 0.25 volts (YAW_RATE_OPEN_SHRT_LO_VOLTAGE), the device is considered to be open or shorted low. This failsafe runs at a rate of 7 msec(ANG_RATE_SENSOR_LOW_RATE).	30msec	Ignition latched	EBD: R0 ABS: R0 TC: R0 YSC: R2 HBA: R0 EDTR: R0 BrakeAC:R0 HA : R2 ITPM: R2	**Display:** **PFV:** No	None

PROPRIETARY NOTICE: This document is copyright and the property of TRW Automotive Inc. It is disclosed in confidence. It may not be copied (in whole or in part), disclosed to others or used for manufacturing, without the prior written consent of TRW Automotive Inc.
© TRW Automotive Inc. 2006

5.9.3 YAW Sensor Temperature Range

DTC Code	Fault symptom	Condition for recog-nition	Reason for fault	Detection rules	Detection time	Latch type	System response	Driver notification -------- PFv(Yes/No)	Remarks
4063	28	Ignition On, Continuous Failsafe	***electronic fault in sensor***	YAW_SENSOR_TEMPERATURE_RANGE: The data from sthe sensor will transmit every 1ms. The temperature sensor values will be checked to validity every 5ms becaue the temperature module needs the tempera-ture data just every 5ms. Are the temperature values not in the valid range (-60°C to 150C°) this fault will be set. If this fault is set the temperature sensor vaules are frozen.	100msec	Ignition latched	EBD: R0 ABS: R0 TC: R1 YSC: R2 HBA: R0 EDTR: R0 BrakeAC:R0 HA : R2 ITPM: R2	**Display:** **PFV:** No	None

PROPRIETARY NOTICE: This document is copyright and the property of TRW Automotive Inc. It is disclosed in confidence. It may not be copied (in whole or in part), disclosed to others or used for manufacturing, without the prior written consent of TRW Automotive Inc.
© TRW Automotive Inc. 2006

5.9.4 YAW Sensor Erratic Failure (Only use for ESC)

DTC Code	Fault symptom	Condition for recog-nition	Reason for fault	Detection rules	Detection time	Latch type	System response	Driver notification -------- PFV (Yes/No)	Remarks
4063	09	Ignition On, Continuous Failsafe	***if output of the device is in fluc-tuation with shorted or open conditions***	**YAW Sensor Erratic Failure Fault:** If status of the Open or Short Low Monitor or the Shorted High Monitor were detecting a fault, but no longer detected, the erratic condition is observed. This failsafe runs at a rate of ANG_RATE_SENSOR_LOW_RATE (7 msec).	16msec	Ignition latched	EBD: R0 ABS: R0 TC: R0 YSC: R2 HBA: R0 EDTR: R0 BrakeAC:R0 HA: R2 ITPM: R2	**Display:** **PFV:** Yes	None

PROPRIETARY NOTICE: This document is copyright and the property of TRW Automotive Inc. It is disclosed in confidence. It may not be copied (in whole or in part), disclosed to others or used for manufacturing, without the prior written consent of TRW Automotive Inc.
© TRW Automotive Inc. 2006

5.9.5 YAW Sensor Raw Offest Failure (Only use for ESC)

DTC Code	Fault symptom	Condition for recog-nition	Reason for fault	Detection rules	Detection time	Latch type	System response	Driver notification -------- PFV (Yes/No)	Remarks
4063	22	Power Mode RUN, Continuous Failsafing	***Electronic sensor fault***	**YAW Sensor Raw Offest Failure Fault:** *Fault Identifier:* YAW_SENSOR_RAW_OFFSET_ERROR The Yaw Rate signal has to show an implausible high value while standing still. The fault is set under the following conditions: 1. Yaw Rate is valid 2. Wheel speed information is valid 3. Vehicle is standing still 4. Yaw Rate signal is > 25 deg/sec for 200 msec This fault is passed, if the Yaw Rate signal is < 25 deg/sec for 1 second. Another way to pass this fault is to do the initialization (no prior fault). This fault is cleared if all Yaw Rate monitor routines have passed (in case of prior fault and ECE handling enabled). Counter Behavior: Up: 1,2,3,4 fulfilled Reset: 1 or 2 or 3 not fulfilled or detecting ➔ passing or passing ➔ detecting	200 msecs	Ignition latched	EBD: R0 ABS: R0 TC: R2 YSC: R2 HBA: R0 EDTR: R0 Brake AC:R0 HA : R2 ITPM :R2	**Display:** **PFV:** Yes	None

PROPRIETARY NOTICE: This document is copyright and the property of TRW Automotive Inc. It is disclosed in confidence. It may not be copied (in whole or in part), disclosed to others or used for manufacturing, without the prior written consent of TRW Automotive Inc.
© TRW Automotive Inc. 2006

5.9.6 YAW Sensor Offest Failure (Only use for ESC)

DTC Code	Fault symptom	Condition for recog-nition	Reason for fault	Detection rules	Detection time	Latch type	System response	Driver notification -------- PFV (Yes/No)	Remarks

PROPRIETARY NOTICE: This document is copyright and the property of TRW Automotive Inc. It is disclosed in confidence. It may not be copied (in whole or in part), disclosed to others or used for manufacturing, without the prior written consent of TRW Automotive Inc.
© TRW Automotive Inc. 2006

DTC Code	Fault symptom	Condition for recog-nition	Reason for fault	Detection rules	Detection time	Latch type	System response	Driver notification -------- PFV (Yes/No)	Remarks
4063	22	Power Mode RUN, Continuous Failsafing	***Electronic sensor fault***	**YAW Sensor Offest Failure Fault:** The Yaw Rate signal shows an offset out of specification. The fault is set under the following conditions: 1. Yaw Rate is valid 2. Steering angle, Lat Acc and wheel speed information are valid 3. Vehicle speed > 4.2 m/sec 4. Stable forward driving 5. a: 1 learned offset is > 8 deg/sec before the initialization OR b: Continuously learned offsets are > 5 deg/sec for 1 sec before the initialization OR c: 4 continuously learned offsets are > 5 deg/sec during straight driving after the initialization (or just one, if the offset during stand still was also > 5 deg/sec). Before initialization: Offset = Difference between the measured Yaw Rate and the estimated Yaw Rate. The estimated Yaw Rate is a function of steering angle and vehicle speed. After initialization: Offset = Deviation of the measured Yaw Rate from zero during straight driving for a certain dis-tance. This fault is passed directly when the initialization was finished successfully or if 4 good offsets have been learned after the initialization (no prior fault). This fault is cleared if <u>all</u> Yaw Rate monitor routines have passed (in case of prior fault and ECE handling enabled). Counter Behavior: Up: 1,2,3,4,5(a or b or c) fulfilled Down: 1,2,3,4 fulfilled and 5c not fulfilled anymore Hold: 2 or 3 or 4 not fulfilled (no offset learned by zeroing) Reset: 1 not fulfilled	Longtime monitoring	Ignition latched	EBD: R0 ABS: R0 TC: R2 YSC: R2 HBA: R0 EDTR: R0 Brake AC:R0 HA : R2 ITPM :R2	**Display:** **PFV:** Yes	None

PROPRIETARY NOTICE: This document is copyright and the property of TRW Automotive Inc. It is disclosed in confidence. It may not be copied (in whole or in part), disclosed to others or used for manufacturing, without the prior written consent of TRW Automotive Inc.
© TRW Automotive Inc. 2006

5.9.7 YAW Sensor Gain Error (Only use for ESC)

DTC Code	Fault symptom	Condition for recog-nition	Reason for fault	Detection rules	Detection time	Latch type	System response	Driver notification -------- PFV(Yes/No)	Remarks

PROPRIETARY NOTICE: This document is copyright and the property of TRW Automotive Inc. It is disclosed in confidence. It may not be copied (in whole or in part), disclosed to others or used for manufacturing, without the prior written consent of TRW Automotive Inc.
© TRW Automotive Inc. 2006

DTC Code	Fault symptom	Condition for recog-nition	Reason for fault	Detection rules	Detection time	Latch type	System response	Driver notification -------- PFV(Yes/No)	Remarks
4063	22	Power Mode RUN, Continuous Failsafing	***Electronic sensor fault***	**YAW Sensor Gain Error Fault:** This monitoring recognizes offset faults as well as amplification faults. The fault is set under the following conditions: 1. Yaw Rate, Lat Acc, steering angle and wheel speed information are valid 2. Vehicle speed > 1.2 m/sec, while driving forward 3. The difference between the measured Yaw Rate (zeroed) and the estimated Yaw Rate is > failure threshold for 500 msec The failure threshold consists of a basic threshold which depends on the initialization state and a variable threshold which depends on the driving situation (Ay, steering angle and steering angle derivative). The lowest possible failure threshold is 2.5 deg/sec. The maturation time is based on magnitude of error. This fault is passed if the difference between the measured Yaw Rate (zeroed) and the estimated Yaw Rate is < failure threshold for 1 second (no prior fault). The fault isn't passed in case YSC is active and the failure counter did already start to detect a failure. This fault is cleared if <u>all</u> Yaw Rate monitor routines have passed. For passing this monitor function, curve driving is required. Therefore the absolute value of Yaw Rate must be > 3 deg/sec and absolute value of Yaw Rate from steering angle must be > 3 deg/sec (in case of prior fault and ECE handling enabled). Counter Behavior: Up: 1,2,3(a or b) fulfilled Reset: 1 or 2 not fulfilled or detecting ➔ passing or passing ➔ detecting	500 msec	Ignition latched	EBD: R0 ABS: R0 TC: R2 YSC: R2 HBA: R0 EDTR: R0 Brake AC:R0 HA : R2 ITPM :R2	**Display:** **PFV:** Yes	None

PROPRIETARY NOTICE: This document is copyright and the property of TRW Automotive Inc. It is disclosed in confidence. It may not be copied (in whole or in part), disclosed to others or used for manufacturing, without the prior written consent of TRW Automotive Inc.
© TRW Automotive Inc. 2006

5.9.8 YAW Sensor Not Alive Error (Only use for ESC)

DTC Code	Fault symptom	Condition for recog-nition	Reason for fault	Detection rules	Detection time	Latch type	System response	Driver notification -------- PFV (Yes/No)	Remarks
4063	29	Power Mode RUN, Continuous Failsafing	***Electronic sensor fault***	**YAW Sensor Not Alive Error Fault:** The Yaw Rate signal does not change the LSB or is greater than the sensor max value. The fault is set under the following conditions: 1. Yaw Rate is valid 2. Wheel speed information is valid 3. Vehicle speed > 3 m/sec 4. a: Yaw Rate signal shows constant value and is < +/-85 deg/sec for 10 seconds OR b: Yaw Rate signal shows constant value and is < +/-85 deg/sec and SWA derivative is > 15 deg/sec and Lat Acc derivative is > 2 m/sec³ for 1 second OR 5. Yaw Rate is valid 6. Yaw Rate signal is absolute > max value (130 deg/sec) for 1 seconds This fault is passed if the Yaw Rate signal changes its value for 1 second (no prior fault). This fault is cleared if <u>all</u> Yaw Rate monitor routines have passed (in case of prior fault and ECE handling enabled). Counter Behavior: Up: 1,2,3,4(a or b) or 5,6 fulfilled Hold: 1,2,4 (a or b) fulfilled and 3 not fulfilled Reset: 1 not fulfilled or detecting ➔ passing or passing ➔ detecting.	1sec--10sec	Ignition latched	EBD: R0 ABS: R0 TC: R2 YSC: R2 HBA: R0 EDTR: R0 Brake AC:R0 HA : R2 ITPM :R2	**Display:** **PFV:** Yes	None

PROPRIETARY NOTICE: This document is copyright and the property of TRW Automotive Inc. It is disclosed in confidence. It may not be copied (in whole or in part), disclosed to others or used for manufacturing, without the prior written consent of TRW Automotive Inc.
© TRW Automotive Inc. 2006

5.9.9 Yaw Sensor Diag state (Only use for ESC)

DTC Code	Fault symptom	Condition for recog-nition	Reason for fault	Detection rules	Detection time	Latch type	System response	Driver notification -------- PFV (Yes/No)	Remarks
4063	09	Ignition On, Continuous Failsafe	***if feedback from the sensor does not matches the expected feed-back***	**Yaw Sensor Diag state Fault:** During normal operation the device has a feedback pin that indicates the diagnostic status of the device based on the status of the check pin input to the device. If the feedback from the sensor does not matches the ex-pected feedback based on the status of the check pin then this fault is set. This is checked at a rate of 7 msec (ANG_RATE_SENSOR_LOW_RATE).	200 msec	Ignition latched	EBD: R0 ABS: R0 TC: R0 YSC: R2 HBA: R0 EDTR: R0 BrakeAC:R0 HA: R2 ITPM: R2	**Display:** **PFV:** Yes	None

PROPRIETARY NOTICE: This document is copyright and the property of TRW Automotive Inc. It is disclosed in confidence. It may not be copied (in whole or in part), disclosed to others or used for manufacturing, without the prior written consent of TRW Automotive Inc.
© TRW Automotive Inc. 2006

5.9.10 Yaw Sensor Ground loss (Only use for ESC)

DTC Code	Fault symptom	Condition for recog-nition	Reason for fault	Detection rules	Detection time	Latch type	System response	Driver notification -------- PFV (Yes/No)	Remarks
4063	09	Ignition On, Continuous Failsafe	***If the device losses ground***	**Yaw Sensor Ground loss Fault:** If the device losses ground, the output of the device will change to allow detection. This is checked at data coming back from the device to test for ground loss. If the voltage from the sensor is less then 1.5 volts (ANG_RATE_GND_LOSS_VOLTAGE), it checks the difference between the last stored temperature and a new stored temperature. If the difference is greater then 16 degrees celsius (ANG_RATE_TEMP_GND_LOSS_OFFSET) the sensor has lost ground. This check is run at a rate of 7 msec (ANG_RATE_SENSOR_LOW_RATE).	15msec	Ignition latched	EBD: R0 ABS: R0 TC: R0 YSC: R2 HBA: R0 EDTR: R0 BrakeAC:R0 HA: R2 ITPM: R2	**Display:** **PFV:** Yes	None

PROPRIETARY NOTICE: This document is copyright and the property of TRW Automotive Inc. It is disclosed in confidence. It may not be copied (in whole or in part), disclosed to others or used for manufacturing, without the prior written consent of TRW Automotive Inc.
© TRW Automotive Inc. 2006

5.9.11 Angular Rate Sensor Built-in Test Failure-YAW RATE TEST FAIL(Only use for ESC)

DTC Code	Fault symptom	Condition for recog-nition	Reason for fault	Detection rules	Detection time	Latch type	System response	Driver notification -------- PFV(Yes/No)	Remarks
4063	09	Ignition On, Continuous Failsafe	***- Sens device of yaw rate sensor is defective*** ***- Diagnostic logic of yaw rate sen-sor is defekt***	**Angular(yaw) Rate Sensor Built-in Test Failure Fault:** During startup the component will command a self test that verifies the offset is within the range determined by the NVRAM monitor When a commanded test is issued to the device, if the offset applied to the output is not in range then this fault is set. The data is averaged before, during and after the offset is applied. The range is listed below. Axis : Test Offset Min : Min_Expected_Offset (0.560 Volts) Max : Max_Expected_Offset (1.337 Volts)	Immediately (3msecs)	Ignition latched	EBD: R0 ABS: R0 TC: R0 YSC: R2 HBA: R0 EDTR: R0 BrakeAC:R0 HA: R2 ITPM: R2	**Display:** **PFV:** Yes	None

PROPRIETARY NOTICE: This document is copyright and the property of TRW Automotive Inc. It is disclosed in confidence. It may not be copied (in whole or in part), disclosed to others or used for manufacturing, without the prior written consent of TRW Automotive Inc.
© TRW Automotive Inc. 2006

5.9.12 Angular Rate Sensor Configuration Failure (Only use for ESC)

DTC Code	Fault symptom	Condition for recog-nition	Reason for fault	Detection rules	Detection time	Latch type	System response	Driver notification -------- PFV (Yes/No)	Remarks
406A	54	Ignition On, Continuous Failsafe	***if the contents of NVRAM are not accurate***	**Angular Rate Sensor Configuration Failure Fault:** **Fault Identifier:** **ANG_RATE_SENSOR_CONFIG_FAILURE** During startup the contents of NVRAM like the axis offset, gain, and test offset are verified whether they are within a valid range, and that the nvram_database CRC is okay. The ranges are listed below. If any data fails the defaults listed below are used. Axis : Gain Min : ANG_RATE_NVRAM_MIN_GAIN Max : ANG_RATE_NVRAM_MAX_GAIN Axis : Offset Min : ANG_RATE_NVRAM_MIN_OFFSET Max : ANG_RATE_NVRAM_MAX_OFFSET Axis : Test Offset Min : ANG_RATE_MIN_PART_TEST_OFFSET Max : ANG_RATE_MAX_PART_TEST_OFFSET Gain Default : ANG_RATE_NVRAM_SCALE_FACTOR Offset Default : 0 Min Expected Offset : ANG_RATE_MIN_PART_TEST_OFFSET Max Expected Offset: ANG_RATE_MAX_PART_TEST_OFFSET.	Immediately	Ignition latched	EBD: R0 ABS: R0 TC: R0 YSC: R2 HBA: R0 EDTR: R0 BrakeAC:R0 HA: R2 ITPM: R2	**Display:** **PFV:** No	None

PROPRIETARY NOTICE: This document is copyright and the property of TRW Automotive Inc. It is disclosed in confidence. It may not be copied (in whole or in part), disclosed to others or used for manufacturing, without the prior written consent of TRW Automotive Inc.
© TRW Automotive Inc. 2006

5.9.13 Excessive YSC control Error

DTC Code	Fault symptom	Condition for recog-nition	Reason for fault	Detection rules	Detection time	Latch type	System response	Driver notification -------- PFV (Yes/No)	Remarks
406B	06	Power Mode RUN, Continuous Failsafing	**Mechanical fault in sensor**	**Excessive YSC control Error** *Fault Identifier:* EXCESSIVE_YSC_CONTROL_ERROR YSC control activation is present for an implausible long time. The fault is set under the following conditions: 1. Continuous YSC understeer brake activation for 63 sec OR 2. Continuous YSC oversteer brake activation for 33 sec This fault is cleared when the system did initialize.	33sec-63sec	Ignition latched	EBD: R0 ABS: R0 TC: R0 YSC: R2 HBA: R0 EDTR: R0 Brake AC:R0 HA : R2 ITPM :R2	**Display:** **PFV:** Yes	None

PROPRIETARY NOTICE: This document is copyright and the property of TRW Automotive Inc. It is disclosed in confidence. It may not be copied (in whole or in part), disclosed to others or used for manufacturing, without the prior written consent of TRW Automotive Inc.
© TRW Automotive Inc. 2006

5.10 Lateral Sensor Faults

5.10.1 Lateral Sensor Out Of Range (Only use for ESC)

DTC Code	Fault symptom	Condition for recog-nition	Reason for fault	Detection rules	Detection time	Latch type	System response	Driver notification -------- PFV(Yes/No)	Remarks
4061	28	Ignition On, Continuous Failsafe	***data returned is not within the range***	**Lateral Sensor Out Of Range Fault:** The failsafe monitor will be run for all accelerometer axes available on the device. This monitor checks the data being returned by the driver is within device limits. The failsafe checks the data returned by the driver at a rate of ACCEL_SENSOR_TIMEBASE and does a range check of the data. If the data is not within the range this fault is set. When the fault is being detected, data is not updated by the compo-nent. The ranges used are in the table below. Axis : Lateral Min : ACCEL_SENSOR_LAT_MIN_VALUE (-2.3) Max : ACCEL_SENSOR_LAT_MAX_VALUE. (2.3)	15msec	Ignition latched	EBD: R0 ABS: R0 TC: R0 YSC: R2 HBA: R0 EDTR: R0 BrakeAC:R0 HA: R2 ITPM : R2	**Display:** **PFV:** Yes	None

PROPRIETARY NOTICE: This document is copyright and the property of TRW Automotive Inc. It is disclosed in confidence. It may not be copied (in whole or in part), disclosed to others or used for manufacturing, without the prior written consent of TRW Automotive Inc.
© TRW Automotive Inc. 2006

5.10.2 Lateral Acceleration Sensor Offest Failure (Only use for ESC)

DTC Code	Fault symptom	Condition for recog-nition	Reason for fault	Detection rules	Detection time	Latch type	System response	Driver notification --------- PFV (Yes/No)	Remarks

PROPRIETARY NOTICE: This document is copyright and the property of TRW Automotive Inc. It is disclosed in confidence. It may not be copied (in whole or in part), disclosed to others or used for manufacturing, without the prior written consent of TRW Automotive Inc.
© TRW Automotive Inc. 2006

DTC Code	Fault symptom	Condition for recog-nition	Reason for fault	Detection rules	Detection time	Latch type	System response	Driver notification -------- PFV (Yes/No)	Remarks
4061	22	Ignition On, Continuous Failsafe	***Electronic sensor fault***	**Lateral Acceleration Sensor Offest Failure Fault:** LAT_SENSOR_OFFSET_ERROR The Lat Acc signal shows an offset out of specification. The fault is set under the following conditions: 1. Lat Acc valid 2. Yaw Rate, wheel speed information and steering angle are valid 3. Vehicle speed > 4.2 m/sec 4. Stable forward driving 5. a: 1 learned offset is > 4 m/sec² before initialization OR b: Continuously learned offsets are > 1.8 m/sec² for 4 sec and vehicle speed > 13.8 m/sec or driving distance > 150m before the initialization OR c: Continuously learned offsets are > 3 m/sec² for 4 sec and vehicle speed < 13.8 m/sec and driving distance < 150 m before the initialization OR d: 8 continuously learned offsets are > 1.8 m/sec² during straight driving after the initialization Before initialization: Offset = Difference between the measured Lat Acc and the estimated Lat Acc. The estimated Lat Acc is calculated out of steering angle and vehicle speed or Yaw Rate and vehicle speed. After initialization: Offset = Deviation of the measured Lat Acc from zero during straight driving for a certain distance. This fault is passed directly when the initialization was finished successfully or if 8 good offsets have been learned after the initialization (no prior fault). This fault is cleared if all Lat Acc monitor routines have passed (in Case of prior fault and ECE handling enabled). Counter Behavior: Up: 1,2,3,4,5(a or b or c or d) fulfilled Down: 1,2,3,4 fulfilled and 5(a or b or c or d) not fulfilled anymore Hold: 2 or 3 or 4 not fulfilled (no offset learned by zeroing) Reset: 1 not fulfilled	See detection rules	Ignition latched	EBD: R0 ABS: R0 TC: R2 YSC: R2 HBA: R0 EDTR: R0 Brake AC:R0 HA : R2 ITPM :R2	**Display:** **PFV:** Yes	None

PROPRIETARY NOTICE: This document is copyright and the property of TRW Automotive Inc. It is disclosed in confidence. It may not be copied (in whole or in part), disclosed to others or used for manufacturing, without the prior written consent of TRW Automotive Inc.

© TRW Automotive Inc. 2006

5.10.3 Lateral Acceleration Sensor Raw Offest Failure (Only use for ESC)

DTC Code	Fault symptom	Condition for recog-nition	Reason for fault	Detection rules	Detection time	Latch type	System response	Driver notification -------- PFV(Yes/No)	Remarks
4061	22	Vehicle is standing still	***Electronic sensor fault***	**Lateral Acceleration Sensor Raw Offest Failure Fault:** *Fault Identifier:* LAT_SENSOR_RAW_OFFSET_ERROR The Lat Acc signal has to show an implausible high value while standing still. The fault is set under the following conditions: 1. Lat Acc is valid 2. Wheel speed information is valid 3. Vehicle is standing still 4. Lat Acc signal > 6 m/sec² for 200 msec This fault is passed, if the Lat Acc signal is < 6 m/sec² for 1 second. Another way to pass this fault is to do the initiali-zation (no prior fault). This fault is cleared if all Lat Acc monitor routines have passed (in case of prior fault and ECE handling enabled). Counter Behavior: Up: 1,2,3,4 fulfilled Reset: 1 or 2 or 3 not fulfilled or detecting ➔ passing or passing ➔ detecting	200msec	Ignition latched	EBD: R0 ABS: R0 TC: R2 YSC: R2 HBA: R0 EDTR: R0 Brake AC:R0 HA : R2 ITPM :R2	**Display:** **PFV:** Yes	None

PROPRIETARY NOTICE: This document is copyright and the property of TRW Automotive Inc. It is disclosed in confidence. It may not be copied (in whole or in part), disclosed to others or used for manufacturing, without the prior written consent of TRW Automotive Inc.
© TRW Automotive Inc. 2006

5.10.4 Lateral Acceleration Sensor Gain Error (Only use for ESC)

DTC Code	Fault symptom	Condition for recog-nition	Reason for fault	Detection rules	Detection time	Latch type	System response	Driver notification -------- PFV (Yes/No)	Remarks
4061	22	Vehicle-speed > 4.2 m/sec, while driving forward	***Electronic sensor fault***	**Lat Acceleration Sensor - Gain Error** *Fault Identifier:* LAT_SENSOR_GAIN_ERROR This monitoring recognizes offset faults as well as amplification faults. The fault is set under the following conditions: 1. Yaw Rate, Lat Acc, steering angle and wheel speed information are valid 2. Vehicle-speed > 4.2 m/sec, while driving forward 3. a: The difference between the measured Lat Acc (zeroed) and the estimated Lat Acc is > failure threshold for 1.5 seconds. OR b: The difference between the measured Lat Acc (zeroed) and the estimated Lat Acc is > two times the failure threshold 0.75 seconds. The fault basic threshold is based on the initialization state (initialized, 2 m/sec² or not, 4 m/sec² for basic threshold). It will be increased based on the driving situation, a function of vehicle speed, Yaw Rate, steering angle and steering angle rate. This fault is passed if the difference between the measured Lat Acc (zeroed) and the estimated Lat Acc is < failure threshold for 1 second (no prior fault). This fault is cleared if all Lat Acc monitor routines have passed. For passing this monitor function, curve driving is required. Therefore the absolute value of Lat Acc must be > 1 m/sec² and absolute value of Lat Acc from steering angle must be > 1 m/sec² (in case of prior fault and ECE handling enabled). Counter Behavior: Up: 1,2,3(a or b) fulfilled Reset: 1 or 2 not fulfilled or detecting ➔ passing or passing ➔ detecting	1500 msec (750 msec if error > 2 x error threshold)	Ignition latched	EBD: R0 ABS: R0 TC: R2 YSC: R2 HBA: R0 EDTR: R0 Brake AC:R0 HA : R2 ITPM :R2	**Display:** **PFV:** Yes	None

PROPRIETARY NOTICE: This document is copyright and the property of TRW Automotive Inc. It is disclosed in confidence. It may not be copied (in whole or in part), disclosed to others or used for manufacturing, without the prior written consent of TRW Automotive Inc.
© TRW Automotive Inc. 2006

5.10.5 Accel Sensor Id 0 - Temperature Range

DTC Code	Fault symptom	Condition for recog-nition	Reason for fault	Detection rules	Detection time	Latch type	System response	Driver notification -------- PFV (Yes/No)	Remarks
406A	28	Vehicle speed > 3 m/sec	***- electronic fault in sensor*** ***- Overtemperature of sensor element***	The data from sthe sensor will transmit every 1ms. The temperature sensor values will be checked to validity every 5ms becaue the temperature module needs the temperature data just every 5ms. Are the temperature values not in the valid range (over 143°C) this fault will be set. If this fault is set the temperature sensor vaules are frozen.	15sec	Ignition latched	EBD: R0 ABS: R0 TC: R1 YSC: R2 HBA: R0 EDTR: R0 Brake AC:R0 HA : R2 ITPM: R2	**Display:** **PFV:** Yes	None

PROPRIETARY NOTICE: This document is copyright and the property of TRW Automotive Inc. It is disclosed in confidence. It may not be copied (in whole or in part), disclosed to others or used for manufacturing, without the prior written consent of TRW Automotive Inc.
© TRW Automotive Inc. 2006

5.10.6 Lateral sensor not alive error (Only use for ESC)

DTC Code	Fault symptom	Condition for recog-nition	Reason for fault	Detection rules	Detection time	Latch type	System response	Driver notification -------- PFV (Yes/No)	Remarks
4061	29	Vehicle speed > 3 m/sec	***Electronic sensor fault***	**Lat Acceleration Sensor - Not Alive Error** *Fault Identifier:* LAT_SENSOR_NOT_ALIVE_ERROR The Lat Acc signal does not change the LSB or is greater than the sensor max value. The fault is set under the following conditions: 1. Lat Acc is valid 2. Wheel speed information is valid 3. Vehicle speed > 3 m/sec 4. a: Lat Acc signal shows constant value and is < +/-14 m/sec² for 10 seconds OR b: Lat Acc signal shows constant value and is < +/-14 m/sec² and SWA derivative is > 15 deg/sec and Yaw Rate derivative is > 10 deg/sec² for 1 second OR 5. Lat Acc is valid 6. Lat Acc signal is absolute > max value (25 m/sec²) for 1 seconds This fault is passed if the Lat Acc signal changes its value for 1 second (no prior fault). This fault is cleared if all Lat Acc monitor routines have passed (in case of prior fault and ECE handling enabled). Counter Behavior: Up: 1,2,3,4(a or b) or 5,6 fulfilled Hold: 1,2,4(a or b) fulfilled and 3 not fulfilled Reset: 1 not fulfilled or detecting ➔ passing or passing ➔ detecting	1sec—10sec	Ignition latched	EBD: R0 ABS: R0 TC: R2 YSC: R2 HBA: R0 EDTR: R0 Brake AC:R0 HA : R2 ITPM :R2	**Display:** **PFV:** Yes	None

PROPRIETARY NOTICE: This document is copyright and the property of TRW Automotive Inc. It is disclosed in confidence. It may not be copied (in whole or in part), disclosed to others or used for manufacturing, without the prior written consent of TRW Automotive Inc.
© TRW Automotive Inc. 2006

5.11 Accel Device Faults

5.11.1 Inertial sensor initialisation fault

DTC Code	Fault symptom	Condition for recog-nition	Reason for fault	Detection rules	Detection time	Latch type	System response	Driver notification -------- PFV (Yes/No)	Remarks
5107	04	Ignition On, Continuous Failsafe	***Mechanical fault in sensor***	**Excessive Initialization Time** ***Fault Identifier:*** **EXCESSIVE_INIT_TIME_ERROR** The initialization has to be done after a certain distance has been driven. For the initialization a toggling at least on the LSB for the lateral acceleration, yaw rate and steering angle signal is necessary, to see the sensors are alive. The detection is active until the system is initialized: 1. Steering angle, Yaw Rate, Lat Acc and master cylinder pressure are valid. 2. Vehicle speed > 4.2 m/sec, forward driving. 3. If the system did not initialized after 1000m of straight line driving (recognized via steering angle, Yaw Rate or wheel speeds) or 3000m of overall driving, the fault will be latched. OR according to NHTSA regulation: if the system does not initialize within 2 min driving at a speed > 11.2 m/sec	Fahrstrecke 1-3 km	Condition latched	EBD: R0 ABS: R0 TC: R2 YSC: R2 HBA: R0 EDTR: R0 Brake AC:R0 HA : R2 ITPM :R2	**Display:** **PFV:** Yes	None

PROPRIETARY NOTICE: This document is copyright and the property of TRW Automotive Inc. It is disclosed in confidence. It may not be copied (in whole or in part), disclosed to others or used for manufacturing, without the prior written consent of TRW Automotive Inc.
© TRW Automotive Inc. 2006

5.11.2 Inertial Sensors Missing Calibration

DTC Code	Fault symptom	Condition for recog-nition	Reason for fault	Detection rules	Detection time	Latch type	System response	Driver notification -------- PFV (Yes/No)	Remarks
5107	54	Ignition On, Continuous Failsafe	- sensors not yet calibrated	**Inertial Sensors – Missing Calibration** *Fault Identifier:* INERTIAL_SENSORS_MISSING_CALIBRATION As long as there is no Yaw Rate or Lat Acc or Long Acc (if available) sensor offset available in NVRAM through sensor calibration, the fault is latched, otherwise passed.	Immediately	Condtion Latched	EBD: R0 ABS: R0 TC: R2 YSC: R2 HBA: R0 EDTR: R0 Brake AC:R0 HA : R2 ITPM :R2	**Display:** **PFV:** No	None

PROPRIETARY NOTICE: This document is copyright and the property of TRW Automotive Inc. It is disclosed in confidence. It may not be copied (in whole or in part), disclosed to others or used for manufacturing, without the prior written consent of TRW Automotive Inc.
© TRW Automotive Inc. 2006

5.11.3 Acceleration Sensor Diag status Test Failure (Only use for ESC)

DTC Code	Fault symptom	Condition for recog-nition	Reason for fault	Detection rules	Detection time	Latch type	System response	Driver notification -------- PFV (Yes/No)	Remarks
406A	09	Ignition On, Continuous Failsafe	***Sensor element defect*** ***micro controller Fault***	**Acceleration Sensor Diag status Test Failure Fault:** The failsafe monitor will be run for all accelerometer axes available on the device. This monitor routine checks if the driver is indicating the device for the current axis is experiencing a diagnostic failure(Checks the diagnostic status from the driver) This failsafe runs at a rate of ACCEL_SENSOR_LOW_RATE (7 msec), and filters the diagnostic status. If there is a diagnostic failure this failure is set. When a failure condition is detected, the component will halt calculation of axis data. This algorithm relies on the driver to determine which feedbacks from the device determine a diagnostic failure. It should be based on items that the device is continuously monitoring or checks at start up.	15 msec	Ignitionlatched	EBD: R0 ABS: R0 TC: R0 YSC: R2 HBA: R0 EDTR: R0 BrakeAC:R0 HA: R2 ITPM: R2	**Display:** **PFV:** Yes	None

PROPRIETARY NOTICE: This document is copyright and the property of TRW Automotive Inc. It is disclosed in confidence. It may not be copied (in whole or in part), disclosed to others or used for manufacturing, without the prior written consent of TRW Automotive Inc.
© TRW Automotive Inc. 2006

5.11.4 Acceleration Sensor Power On Reset (Only use for ESC)

DTC Code	Fault symptom	Condition for recognition	Reason for fault	Detection rules	Detection time	Latch type	System response	Driver notification -------- PFV (Yes/No)	Remarks
406A	09	Ignition On, Continuous Failsafe	***Sensor element defect micro controller Fault***	**Acceleration Sensor Power On Reset Fault:** The failsafe monitor will be run for all accelerometer axes available on the device. This monitor routine checks if the driver is indicating the device for the current axis is experiencing a reset condition (Checks the reset status from the driver). The voltage limits for reset are determined by the device, and cannot be trimmed. This failsafe runs at a rate of ACCEL_SENSOR_LOW_RATE (7 msec), and filters the reset status. If the reset status is determined this fault is set. When the failure condition is detected the component will halt calculation of axis data	15 msec	Ignitionlatched	EBD: R0 ABS: R0 TC: R0 YSC: R2 HBA: R0 EDTR: R0 BrakeAC:R0 HA: R2 ITPM: R2	**Display:** **PFV:** Yes	

PROPRIETARY NOTICE: This document is copyright and the property of TRW Automotive Inc. It is disclosed in confidence. It may not be copied (in whole or in part), disclosed to others or used for manufacturing, without the prior written consent of TRW Automotive Inc.
© TRW Automotive Inc. 2006

5.11.5 Acceleration Sensor is saturated (Only use for ESC)

DTC Code	Fault symptom	Condition for recog-nition	Reason for fault	Detection rules	Detection time	Latch type	System response	Driver notification -------- PFV(Yes/No)	Remarks
406A	09	Ignition On, Continuous Failsafe	***The sensor signal is in saturation***	**Acceleration Sensor is satureated Fault:** The failsafe monitor will be run for all accelerometer axes available on the device. This monitor routine checks If the axis is indicated to be saturated by the accelerometer driver(Checks the axis saturation status from the driver). The limits for saturation are determined by the device, and cannot be trimmed. This failsafe runs at a rate of ACCEL_SENSOR_LOW_RATE (7 msec), and filters the saturation status. If the saturation state is determined this fault is set. When the failure condition is detected the component will continue to calculate axis data.	85 msec	Condition latched	EBD: R0 ABS: R0 TC: R0 YSC: R2 HBA: R0 EDTR: R0 BrakeAC:R0 HA: R2 ITPM:R2	**Display:** **PFV:** Yes	None

PROPRIETARY NOTICE: This document is copyright and the property of TRW Automotive Inc. It is disclosed in confidence. It may not be copied (in whole or in part), disclosed to others or used for manufacturing, without the prior written consent of TRW Automotive Inc.
© TRW Automotive Inc. 2006

5.11.6 Accel Sensor Configuration Failure (Only use for ESC)

DTC Code	Fault symptom	Condition for recog-nition	Reason for fault	Detection rules	Detection time	Latch type	System response	Driver notification -------- PFV(Yes/No)	Remarks
406A	54	Ignition On, Continuous Failsafe	***sensor configura-tion not match the sensor type***	**Accel Sensor Configuration Failure Fault:** The axis offset and gain are verified whether they are within a valid range, and that the nvram_database CRC is okay. The ranges are listed below. If any data fails the defaults listed below are used. Axis : Gain Min : ACCEL_SENSOR_NVRAM_MIN_GAIN Max : ACCEL_SENSOR_NVRAM_MAX_GAIN Axis : Offset Min : ACCEL_SENSOR_NVRAM_MIN_OFFSET Max : ACCEL_SENSOR_NVRAM_MAX_OFFSET Gain Default : ACCEL_SENSOR_NVRAM_SCALE_FACTOR Offset Default: 0..	Immediately	Ignitionlatched	EBD: R0 ABS: R0 TC: R0 YSC: R2 HBA: R0 EDTR: R0 BrakeAC:R0 HA: R2 ITPM: R2:	**Display:** **PFV:** Yes	None

PROPRIETARY NOTICE: This document is copyright and the property of TRW Automotive Inc. It is disclosed in confidence. It may not be copied (in whole or in part), disclosed to others or used for manufacturing, without the prior written consent of TRW Automotive Inc.
© TRW Automotive Inc. 2006

5.12 Long Sensor Faults

5.12.1 Longitudinal Sensor Out Of Range

DTC Code	Fault symptom	Condition for recog-nition	Reason for fault	Detection rules	Detection time	Latch type	System response	Driver notification -------- PFV (Yes/No)	Remarks
4062	28	Ignition On, Continuous Failsafe	***data returned is not within the range***	**Longitudinal Sensor Out Of Range Fault:** The failsafe monitor will be run for all accelerometer axes available on the device. This monitor checks the data being returned by the driver is within device limits. The failsafe checks the data returned by the driver at a rate of ACCEL_SENSOR_TIMEBASE and does a range check of the data. If the data is not within the range this fault is set. When the fault is being detected, data is not updated by the compo-nent. The ranges used are in the table below. Axis : Longitutinal Min : ACCEL_SENSOR_LONG_MIN_VALUE -2.3 g Max : ACCEL_SENSOR_LONG_MAX_VALUE 2.3 g.	15 msec	Ignition latched	EBD:R0 ABS:R0 TC:R0 YSC:R0 HBA:R0 EDTR: R0 BrakeAC:R0 HA: R2 ITPM: R2	**Display:** **PFV:** Yes	None

PROPRIETARY NOTICE: This document is copyright and the property of TRW Automotive Inc. It is disclosed in confidence. It may not be copied (in whole or in part), disclosed to others or used for manufacturing, without the prior written consent of TRW Automotive Inc.
© TRW Automotive Inc. 2006

5.12.2 Longitudinal Acceleration Sensor Offset Failure

DTC Code	Fault symptom	Condition for recog-nition	Reason for fault	Detection rules	Detection time	Latch type	System response	Driver notification -------- PFV (Yes/No)	Remarks
4062	22	See the detection rules	***Electronic sensor fault***	**Long Acceleration Sensor - Offset Error** *Fault Identifier:* LONG_SENSOR_OFFSET_ERROR The Long Acc signal shows an offset out of specification. The fault is set under the following conditions: 1. Long Acc is valid 2. Wheel speed information is valid 3. All four wheel speeds > 2 m/sec 4. Driving with constant speed on nearly flat road with a maximum Yaw Rate of 10 °/sec 5. No vehicle control activities such as ABS, TC and VSC 6. 8 continuously learned offsets each learned in a 1 sec time window are > 2.5 m/sec² The sensor-offset is determined via balance of torques in x-direction. This monitoring is turned off while vehicle is in deceleration or acceleration or driven in hilly areas. This fault is passed, if 8 plausible offsets have been learned (no prior fault). This fault is cleared if all Long Acc monitor routines have passed (in case of prior fault and ECE handling enabled). Counter Behavior: Up: 1,2,3,4,5,6 fulfilled Hold: 2 or 3 or 4 or 5 not fulfilled (no offset learned by zeroing) Reset: 1 not fulfilled	longtime supervision, see detection rules	Ignition latched	EBD: R0 ABS: R0 TC: R2 YSC: R0 HBA: R0 EDTR: R0 Brake AC:R0 HA : R2 ITPM :R2	**Display:** **PFV:** Yes	None

PROPRIETARY NOTICE: This document is copyright and the property of TRW Automotive Inc. It is disclosed in confidence. It may not be copied (in whole or in part), disclosed to others or used for manufacturing, without the prior written consent of TRW Automotive Inc.
© TRW Automotive Inc. 2006

5.12.3 Longitudinal Acceleration Sensor Raw Offest Failure

DTC Code	Fault symptom	Condition for recog-nition	Reason for fault	Detection rules	Detection time	Latch type	System response	Driver notification -------- PFV (Yes/No)	Remarks
4062	22	See the detection rules	***Electronic sensor fault***	**Long Acceleration Sensor - Raw Offset Error** *Fault Identifier:* LONG_SENSOR_RAW_OFFSET_ERROR The Long Acc signal has to show an implausible high value while standing still. The fault is set under the following conditions: 1. Long Acc is valid 2. Wheel speed information is valid 3. Vehicle is standing still 4. Long Acc signal > 8 m/sec² for 200 msec This fault is passed, if the Long Acc signal is < 8 m/sec² for 1 second. Another way to pass this fault is to see that a good offset was learned (no prior fault). This fault is cleared if all Long Acc monitor routines have passed (in case of prior fault and ECE handling enabled). Counter Behavior: Up: 1,2,3,4 fulfilled Reset: 1 or 2 or 3 not fulfilled or detecting ➔ passing or passing ➔ detecting	200 msec	Ignition latched	EBD: R0 ABS: R0 TC: R2 YSC: R0 HBA: R0 EDTR: R0 Brake AC:R0 HA : R2 ITPM :R2	**Display:** **PFV:** Yes	None

PROPRIETARY NOTICE: This document is copyright and the property of TRW Automotive Inc. It is disclosed in confidence. It may not be copied (in whole or in part), disclosed to others or used for manufacturing, without the prior written consent of TRW Automotive Inc.
© TRW Automotive Inc. 2006

5.12.4 Longitudinal Acceleration Sensor Gain Error

DTC Code	Fault symptom	Condition for recog-nition	Reason for fault	Detection rules	Detection time	Latch type	System response	Driver notification -------- PFV (Yes/No)	Remarks
4062	22	See the detection rules	***Electronic sensor fault***	**Long Acceleration Sensor - Gain Error** *Fault Identifier:* LONG_SENSOR_GAIN_ERROR This monitoring recognizes offset faults as well as amplifica-tion faults. The fault is set under the following conditions: 1. Long Acc and wheel speed information are valid 2. Vehicle speed > 8.4 m/sec 3. Stable forward driving with maximum Yaw Rate of 15 °/sec 4. No vehicle control activities such as ABS, TC and YSC 5. Accelerator position gradient < 600 %/sec 6. Change in estimated Long Acc is > 0.2 m/sec² and difference between measured Long Acc and estimated Long Acc is > 0.8 m/sec² for about 20 seconds (20 observation cycles, each every 1 second) The estimated Long Acc is a function of the vehicle acceleration from wheel speeds. This fault is passed, if the change in the estimated Long Acc is > 0.2 m/sec² and the difference between measured Long Acc and estimated Long Acc is < 0.8 m/sec² for at least 5 observation cycles (no prior fault). This fault is cleared if all Long Acc monitor routines have passed (in case of prior fault and ECE handling enabled). Counter Behavior: Up:1,2,3,4,5,6 fulfilled Down: Detecting ➔ passing or passing ➔ detecting Hold: Observation cycle not completed Reset:1 or 4 or 5 not fulfilled	Longtime monitoring	Ignition latched	EBD: R0 ABS: R0 TC: R2 YSC: R0 HBA: R0 EDTR: R0 Brake AC:R0 HA : R2 ITPM :R2	**Display:** **PFV:** Yes	None

PROPRIETARY NOTICE: This document is copyright and the property of TRW Automotive Inc. It is disclosed in confidence. It may not be copied (in whole or in part), disclosed to others or used for manufacturing, without the prior written consent of TRW Automotive Inc.
© TRW Automotive Inc. 2006

5.12.5 Long Acceleration Sensor – Not Alive Error

DTC Code	Fault symptom	Condition for recog-nition	Reason for fault	Detection rules	Detection time	Latch type	System response	Driver notification -------- PFV (Yes/No)	Remarks
4062	29	See the detection rules	***Electronic sensor fault***	**Long Acceleration Sensor – Not Alive Error** *Fault Identifier:* LONG_SENSOR_NOT_ALIVE_ERROR The Long Acc signal does not change the LSB or is greater than the sensor max value. The fault is set under the following conditions: 1. Long Acc is valid 2. Wheel speed information is valid 3. Vehicle speed > 3 m/sec 4. a: Long Acc signal shows constant value and is < +/-14 m/sec² for 10 seconds OR b: Long Acc signal shows constant value and is < +/-14 m/s² and vehicle acceleration from wheel speeds derivative is > 1 m/sec³ for 1 second OR: 5. Long Acc is valid 6. Long Acc signal is absolute > max value (25 m/sec²) for 1 seconds This fault is passed if the Long Acc signal changes its value for 1 second (no prior fault). This fault is cleared if all Long Acc monitor routines have passed (in case of prior fault and ECE handling enabled). Counter Behavior: Up: 1,2,3,4(a or b) or 5,6 fulfilled Hold: 1,2,4(a or b) fulfilled and 3 not fulfilled Reset: 1 not fulfilled or detecting ➔ passing or passing ➔ detecting	1sec … 10 sec	Ignition latched	EBD: R0 ABS: R0 TC: R2 YSC: R0 HBA: R0 EDTR: R0 Brake AC:R0 HA : R2 ITPM :R2	**Display:** **PFV:** Yes	None

PROPRIETARY NOTICE: This document is copyright and the property of TRW Automotive Inc. It is disclosed in confidence. It may not be copied (in whole or in part), disclosed to others or used for manufacturing, without the prior written consent of TRW Automotive Inc.
© TRW Automotive Inc. 2006

5.13 Pressure Sensor Faults

5.13.1 MC Pressure Sensor open or Shorted High

DTC Code	Fault symptom	Condition for recog-nition	Reason for fault	Detection rules	Detection time	Latch type	System response	Driver notification -------- PFV (Yes/No)	Remarks
4044	09	Ignition On, internal 5 Volt Regulator not out of Range	***Defective pres-sure sensor. Defective pres-sure sensor con-nector. Defective printed circuit board. Defective micro-processor feed-back input port***	**MC Pressure Sensor Ohmic Shorted High Fault:** Pressure Sensor open or Shorted High This diagnostic checks both raw MCP principle and reference signals. The fault is set with the following conditions: 1. Sensor supply is enabled 2. If the reference feedback is greater than 96.5 % of the internal 5V supply for more than 100 msec a fault is set. The fault counter reset to zero if no error exists. This fault is cleared when above condition no longer exist for 100 msec.	100 msec	Ignition latched	EBD: R0 ABS: R0 TC: R1 YSC: R2 HBA: R0 EDTR: R0 Brake AC:R0 HA : R2 ITPM :R2	**Display:** **PFV:** Yes	None

PROPRIETARY NOTICE: This document is copyright and the property of TRW Automotive Inc. It is disclosed in confidence. It may not be copied (in whole or in part), disclosed to others or used for manufacturing, without the prior written consent of TRW Automotive Inc.
© TRW Automotive Inc. 2006

5.13.2 MC Pressure Sensor Ohmic Shorted Low

DTC Code	Fault symptom	Condition for recognition	Reason for fault	Detection rules	Detection time	Latch type	System response	Driver notification -------- PFV (Yes/No)	Remarks
4044	09	Ignition On, internal 5 Volt Regulator not out of Range	***Defective pressure sensor.*** ***Defective pressure sensor connector.*** ***Defective printed circuit board.*** ***Defective microprocessor feedback input port.***	**MC Pressure Sensor Shorted Low Fault:** Pressure Sensor Shorted low This diagnostic checks both raw MCP principle and reference signals. The fault is set with the following conditions: 1. Sensor supply is enabled 2. If the signal voltage is less than 4.5 % of the internal 5V supply for more than 100 msec then the fault is set. The fault counter reset to zero if no error exists. This fault is cleared when above condition no longer exist 100 msec..	100 msec	Ignition latched	EBD: R0 ABS: R0 TC: R1 YSC: R2 HBA: R2 EDTR: R0 Brake AC:R0 HA : R2 ITPM :R2	**Display:** **PFV:** Yes	None

PROPRIETARY NOTICE: This document is copyright and the property of TRW Automotive Inc. It is disclosed in confidence. It may not be copied (in whole or in part), disclosed to others or used for manufacturing, without the prior written consent of TRW Automotive Inc.
© TRW Automotive Inc. 2006

5.13.3 MC Pressure Sensor Correlation Failure

DTC Code	Fault symptom	Condition for recognition	Reason for fault	Detection rules	Detection time	Latch type	System response	Driver notification -------- PFV (Yes/No)	Remarks
4044	09	one MCP raw signal < 150 bar	***electronic or mechanical sensor fault***	**MC Pressure Sensor Correlation Failure Fault:** The MCP sensor has both a principle and a reference pressure feedback (redundant sensor). The fault is detected under the following conditions: INHIBIT CONDITIONS: 1. MCP sensor signal not valid ENABLE CONDITIONS: 2. At least one MCP signal is not in the saturation (one MCP raw signal < 150 bar) FAULT DETECTION CONDITIONS: 3. There is a difference between the pressure sensor signal and reference pressure signal: | pMCP - preference | > perror-threshold The error threshold is 20 bar before and 10 bar after MCP sensor initialization. The detection time is 2 sec with a “3-up-1-down” counter. In case the error threshold is exceeded for an additional 10 bar (high threshold, total: 30 bar before and 20 bar after MCP initialization) the function is using a “15-up-1-down” counter. The fastest possible detection time is 400 ms for this case..	400 msec - 2 sec	Ignition latched	EBD: R0 ABS: R0 TC: R1 YSC: R2 HBA: R2 EDTR: R0 Brake AC:R0 HA : R2 ITPM :R2	**Display:** **PFV:** Yes	None

PROPRIETARY NOTICE: This document is copyright and the property of TRW Automotive Inc. It is disclosed in confidence. It may not be copied (in whole or in part), disclosed to others or used for manufacturing, without the prior written consent of TRW Automotive Inc.
© TRW Automotive Inc. 2006

5.13.4 MC Pressure Sensor Erratic

DTC Code	Fault symptom	Condition for recognition	Reason for fault	Detection rules	Detection time	Latch type	System response	Driver notification -------- PFV (Yes/No)	Remarks
4044	2F	Ignition On, internal 5 Volt Regulator not out of Range	***Loose connection between the pressure sensor and the system module. Intermittent failure of the pressure sensor. Intermittent open or short in the internal circuitry of the printed circuit board.***	**MC Pressure Sensor Erratic Fault:** The erratic pressure sensor fault is set when a designated counter exceeds 800 count(s). The counter's value is initialized to zero at power up and changes each 5 msec. If the pressure sensor transitions between a valid state and an open/shorted state (ohmic failure) then the counter is increased by 50 count(s). Otherwise the counter is decreased by 1 count(s).	800 msec	Ignition latched	EBD: R0 ABS: R0 TC: R1 YSC: R2 HBA: R2 EDTR: R0 Brake AC:R0 HA : R2 ITPM :R2	**Display:** **PFV:** No	None

PROPRIETARY NOTICE: This document is copyright and the property of TRW Automotive Inc. It is disclosed in confidence. It may not be copied (in whole or in part), disclosed to others or used for manufacturing, without the prior written consent of TRW Automotive Inc.
© TRW Automotive Inc. 2006

5.13.5 Pressure Sensor Offset Error

DTC Code	Fault symptom	Condition for recognition	Reason for fault	Detection rules	Detection time	Latch type	System response	Driver notification -------- PFV (Yes/No)	Remarks
4044	22	See ther detection rules	***electronic or mechanical sensor fault***	**Pressure Sensor Offset Error Fault:** INHIBIT CONDITIONS: 1.MCP sensor signal or vehicle speed not valid ENABLE CONDITIONS: 2.Driver is not braking for 2 sec (indicated by BLS), followed by: 3.Driver is accelerating with vehicle acceleration ax > 0,4 m/s² , accelerator position > 20 % and vehicle speed vx > 7,2 kph for 1 sec 4.No vehicle brake control (ABS, ESP, BOD) active This diagnostic checks the sensor offset on both low pass filtered MCP principle and reference signals. FAULT DETECTION CONDITIONS: The fault is detected when the MCP offset on either the principle or reference signal exceeds 10 bar (positive or negative) and the following driving situation (learning cycle) is observed 3 times: The fault counter is reset to zero if a valid learning cycle with MCP offsets < 10 bar is finished. The first valid learning cycle during an ignition cycle is called MCP sensor initialization...	>= 9sec	Ignition latched	EBD: R0 ABS: R0 TC: R1 YSC: R2 HBA: R2 EDTR: R0 Brake AC:R0 HA : R2 ITPM :R2	**Display:** **PFV:** Yes	None

PROPRIETARY NOTICE: This document is copyright and the property of TRW Automotive Inc. It is disclosed in confidence. It may not be copied (in whole or in part), disclosed to others or used for manufacturing, without the prior written consent of TRW Automotive Inc.
© TRW Automotive Inc. 2006

5.13.6 Pressure Sensor Raw Offset Error

DTC Code	Fault symptom	Condition for recognition	Reason for fault	Detection rules	Detection time	Latch type	System response	Driver notification -------- PFV (Yes/No)	Remarks
4044	22	See ther detection rules	***electronic or mechanical sensor fault***	**Pressure Sensor Raw Offset Error Fault:** I INHIBIT CONDITIONS: 1. MCP sensor signal or vehicle speed not valid ENABLE CONDITIONS: 2. Vehicle speed vx > 15 kph 3. Vehicle acceleration ax (both from longitudinal acceleration sensor and calculated from wheelspeeds) > - 0,5 m/s² 4. BLS = 0 or accelerator position < 10 % to avoid two-footed driving situation 5. No vehicle brake control (ABS, ESP, BOD) active FAULT DETECTION CONDITIONS: This diagnostics checks if the MCP (principle or reference) sensor raw signal has an offset > 50 bar for 1 sec under following conditions: An invalid BLS signal is handled as BLS = 1 for this function. An invalid acceleration position signal is handled as 100% for this function...	1sec	Ignition latched	EBD: R0 ABS: R0 TC: R1 YSC: R2 HBA: R2 EDTR: R0 Brake AC:R0 HA : R2 ITPM :R2	**Display:** **PFV:** Yes	None

PROPRIETARY NOTICE: This document is copyright and the property of TRW Automotive Inc. It is disclosed in confidence. It may not be copied (in whole or in part), disclosed to others or used for manufacturing, without the prior written consent of TRW Automotive Inc.
© TRW Automotive Inc. 2006

5.13.7 Pressure Sensor Not Alive Error

DTC Code	Fault symptom	Condition for recog-nition	Reason for fault	Detection rules	Detection time	Latch type	System response	Driver notification -------- PFV (Yes/No)	Remarks
4044	29	See ther detection rules	***electronic or mechanical sensor fault***	**Pressure Sensor Not Alive Error Fault:** INHIBIT CONDITIONS: 1.MCP sensor signal or vehicle speed not valid ENABLE CONDITIONS: 2. DRIVE state: vx > 47 kph 3. DECEL state: ax < -1.5 m/s² for 1.5 sec 4. STOP state: vehicle stopped for 3 sec FAULT DETECTION CONDITIONS: This diagnostic checks if the zeroed MCP sensor principle signal can not change the value anymore. The fault is detected if the following vehicle states are becoming true for 5 times without having a change of at least 5 bar on the pressure sensor signal: The fault counter is stored in NVRAM and directly reset to zero if a change of 5 bar on the pressure signal is observed. The vehicle speed and the MCP sensor signal need to be valid for this diagnostic..	Longtime supervision	Ignition latched	EBD: R0 ABS: R0 TC: R1 YSC: R2 HBA: R2 EDTR: R0 Brake AC:R0 HA : R2 ITPM :R2	**Display:** **PFV:** Yes	None

PROPRIETARY NOTICE: This document is copyright and the property of TRW Automotive Inc. It is disclosed in confidence. It may not be copied (in whole or in part), disclosed to others or used for manufacturing, without the prior written consent of TRW Automotive Inc.
© TRW Automotive Inc. 2006

5.14 Chassinf related faults

5.14.1 Chassinf configuration fault

DTC Code	Fault symptom	Condition for recog-nition	Reason for fault	Detection rules	Detection time	Latch type	System response	Driver notification -------- PFV (Yes/No)	Remarks
406c	55	See detection rules	***When chassinf invalid configuar-tion is received***	**CHASSINF_BCM_NOT_CONFIGURED** If one of the Variantcodeblocks in NVRAM has a checksum error or an invalid entry this fault is set.	Immediately	Ignition Latched	EBD: R0 ABS: R0 TC: R2 YSC: R2 HBA: R2 EDTR: R2 Brake AC:R0 HA : R0 ITPM :R2	**Display:** **PFV:** No	None

PROPRIETARY NOTICE: This document is copyright and the property of TRW Automotive Inc. It is disclosed in confidence. It may not be copied (in whole or in part), disclosed to others or used for manufacturing, without the prior written consent of TRW Automotive Inc.
© TRW Automotive Inc. 2006

5.14.2 Car Configuration Mismatch

DTC Code	Fault symptom	Condition for recog-nition	Reason for fault	Detection rules	Detection time	Latch type	System response	Driver notification -------- PFV (Yes/No)	Remarks
406c	55	See detection rules	***When chassinf invalid configuar-tion is received***	**CHASSINF_CAR_CONFIG_CHANGED** If the engine type on CAN does not match with Engine type in chassinf.	Immediately	Ignition Latched	EBD: R0 ABS: R1 TC: R2 YSC: R2 HBA: R2 EDTR: R2 Brake AC:R0 HA : R0 ITPM :R2	**Display:** **PFV:** No	None

PROPRIETARY NOTICE: This document is copyright and the property of TRW Automotive Inc. It is disclosed in confidence. It may not be copied (in whole or in part), disclosed to others or used for manufacturing, without the prior written consent of TRW Automotive Inc.
© TRW Automotive Inc. 2006

5.14.3 Performance disabled option_All

DTC Code	Fault symptom	Condition for recog-nition	Reason for fault	Detection rules	Detection time	Latch type	System response	Driver notification -------- PFV (Yes/No)	Remarks
FFFF	FF	See detection rules	This fault will never be latched based on current software	PERFORMANCE_ALL_DISABLED_BY_CAL This fault will never be latched based on current software	Immediately	Condition Latched	EBD: R2 ABS: R2 TC: R2 YSC: R2 HBA: R2 EDTR: R2 Brake AC:R0 HA : R2 ITPM :R2	**Display:** **PFV:** No	None

PROPRIETARY NOTICE: This document is copyright and the property of TRW Automotive Inc. It is disclosed in confidence. It may not be copied (in whole or in part), disclosed to others or used for manufacturing, without the prior written consent of TRW Automotive Inc.
© TRW Automotive Inc. 2006

5.14.4 Performance disabled option1

DTC Code	Fault symptom	Condition for recog-nition	Reason for fault	Detection rules	Detection time	Latch type	System response	Driver notification -------- PFV (Yes/No)	Remarks
FFFF	FF	See detection rules	System is partly deactivated via Calibration	PERFORMANCE_OPT1_DISABLED_BY_CAL This fault will latch when **DRP_Only** switch is selected using Winmake.	Immediately	Condition Latched	EBD: R0 ABS: R2 TC: R2 YSC: R2 HBA: R2 EDTR: R2 Brake AC:R0 HA : R2 ITPM :R2	**Display:** **PFV:** No	None

PROPRIETARY NOTICE: This document is copyright and the property of TRW Automotive Inc. It is disclosed in confidence. It may not be copied (in whole or in part), disclosed to others or used for manufacturing, without the prior written consent of TRW Automotive Inc.
© TRW Automotive Inc. 2006

5.14.5 Performance disabled option2

DTC Code	Fault symptom	Condition for recog-nition	Reason for fault	Detection rules	Detection time	Latch type	System response	Driver notification -------- PFV (Yes/No)	Remarks
FFFF	FF	See detection rules	System is partly deactivated via Calibration	PERFORMANCE_OPT2_DISABLED_BY_CAL This fault will latch when **ABS_Only** switch is selected using Winmake.	Immediately	Condition Latched	EBD: R0 ABS: R0 TC: R2 YSC: R2 HBA: R2 EDTR: R2 Brake AC:R0 HA : R2 ITPM :R2	**Display:** **PFV:** No	None

PROPRIETARY NOTICE: This document is copyright and the property of TRW Automotive Inc. It is disclosed in confidence. It may not be copied (in whole or in part), disclosed to others or used for manufacturing, without the prior written consent of TRW Automotive Inc.
© TRW Automotive Inc. 2006

5.14.6 Performance disabled option3

DTC Code	Fault symptom	Condition for recog-nition	Reason for fault	Detection rules	Detection time	Latch type	System response	Driver notification -------- PFV (Yes/No)	Remarks
FFFF	FF	See detection rules	This fault will never be latched based on current software	PERFORMANCE_OPT3_DISABLED_BY_CAL This fault will never be latched based on current software	Immediately	Condition Latched	EBD: R0 ABS: R0 TC: R0 YSC: R0 HBA: R2 EDTR: R0 Brake AC:R0 HA : R2 ITPM :R2	**Display:** **PFV:** No	None

PROPRIETARY NOTICE: This document is copyright and the property of TRW Automotive Inc. It is disclosed in confidence. It may not be copied (in whole or in part), disclosed to others or used for manufacturing, without the prior written consent of TRW Automotive Inc.
© TRW Automotive Inc. 2006

5.14.7 TCBI disabled by adaption

DTC Code	Fault symptom	Condition for recog-nition	Reason for fault	Detection rules	Detection time	Latch type	System response	Driver notification -------- PFV (Yes/No)	Remarks
FFFF	FF	Power ON	TC BI switched off by adaptaion.	**TCBI disabled by adaption** *Fault Identifier: TCBI_DISABLED_BY_CHASSINF* Reduced system performance. TC BI can be disabled thru the associated adaptation channel. The fault is set in case TC BI is disabled be adaptation. Internal fault, to handle fall back level. Not visible with customer diagnose tools. Only in ESC ECUs. Inhibit Conditions: Only in ESC ECUs. This fault can be set during under voltage conditions.	Immediately	Condition Latched	EBD: R0 ABS: R0 TC: R1 YSC: R0 HBA: R0 EDTR: R0 Brake AC:R0 HA : R0 ITPM :R0	**Display:** **PFV:** No	None

PROPRIETARY NOTICE: This document is copyright and the property of TRW Automotive Inc. It is disclosed in confidence. It may not be copied (in whole or in part), disclosed to others or used for manufacturing, without the prior written consent of TRW Automotive Inc.
© TRW Automotive Inc. 2006

5.14.8 ECD disabled by adaption

DTC Code	Fault symptom	Condition for recog-nition	Reason for fault	Detection rules	Detection time	Latch type	System response	Driver notification -------- PFV (Yes/No)	Remarks
FFFF	FF	Power ON	ECD switched off by adaptaion.	**ECD disabled by adaption** *Fault Identifier:* ECD_DISABLED_BY_CHASSINF Reduced system performance. ECD can be disabled thru the associated adaptation channel. The fault is set in case ECD is disabled be adaptation. Internal fault, to handle fall back level. Not visible with customer diagnose tools. Only in ESC ECUs. Inhibit Conditions: Only in ESC ECUs.	Immediately	Condition Latched	EBD: R0 ABS: R0 TC: R0 YSC: R0 HBA: R0 EDTR: R0 Brake AC:R0 HA : R0 ITPM :R0	**Display:** **PFV:** No	None

PROPRIETARY NOTICE: This document is copyright and the property of TRW Automotive Inc. It is disclosed in confidence. It may not be copied (in whole or in part), disclosed to others or used for manufacturing, without the prior written consent of TRW Automotive Inc.
© TRW Automotive Inc. 2006

5.15 Misc Faults

5.15.1 Wheel Speed Output Overcurrent Failure CHANNEL1

DTC Code	Fault symptom	Condition for recog-nition	Reason for fault	Detection rules	Detection time	Latch type	System response	Driver notification -------- PFV (Yes/No)	Remarks
5101	19	Ignition On, Continuous Failsafe	***WSO1 output shorted to battery voltage.***	**Vehicle Speed Output Overcurrent Failure.Fault1:** Fault is set if MIRAM register value shows WSO1 overcur-rent fault flag. If the fault is latched, the corresponding WSO driver is disabled to avoid MIRAM heating. *MIRAM_WSO1_OVERCURRENT*	1000msec	Ignition latched	EBD: R0 ABS: R0 TC: R0 YSC: R0 HBA: R0 EDTR: R0 BrakeAC:R0 HA: R0 ITPM:R0	**Display:** **PFV:** Yes	None

PROPRIETARY NOTICE: This document is copyright and the property of TRW Automotive Inc. It is disclosed in confidence. It may not be copied (in whole or in part), disclosed to others or used for manufacturing, without the prior written consent of TRW Automotive Inc.
© TRW Automotive Inc. 2006

5.15.2 Wheel Speed Output Overcurrent Failure CHANNEL 2

DTC Code	Fault symptom	Condition for recog-nition	Reason for fault	Detection rules	Detection time	Latch type	System response	Driver notification -------- PFV (Yes/No)	Remarks
5101	19	Ignition On, Continuous Failsafe	***WSO2 output shorted to battery voltage***	**Vehicle Speed Output Overcurrent Failure.Fault2:** Fault is set if MIRAM register value shows WSO2 overcur-rent fault flag. If the fault is latched, the corresponding WSO driver is disabled to avoid MIRAM heating. *MIRAM_WSO2_OVERCURRENT*	1000msec	Ignition latched	EBD: R0 ABS: R0 TC: R0 YSC: R0 HBA: R0 EDTR: R0 BrakeAC:R0 HA: R0 ITPM:R0	**Display:** **PFV:** Yes	None

PROPRIETARY NOTICE: This document is copyright and the property of TRW Automotive Inc. It is disclosed in confidence. It may not be copied (in whole or in part), disclosed to others or used for manufacturing, without the prior written consent of TRW Automotive Inc.
© TRW Automotive Inc. 2006

5.15.3 System in KeepAlive

DTC Code	Fault symptom	Condition for recog-nition	Reason for fault	Detection rules	Detection time	Latch type	System response	Driver notification -------- PFV (Yes/No)	Remarks
FFFF	FF	See the detection rules	This fault is set in keep alive mode to disable performance and activate the lamps.	*SYSTEM_IN_KEEP_ALIVE* This fault is set in keep alive mode to disable performance and activate the lamps.	~ 2 minutes (1-3 km) based on the detection condi-tion	Condition latched	EBD: R0 ABS: R2 TC: R2 YSC: R2 HBA: R2 EDTR: R2 BrakeAC:R0 HA: R2 ITPM:R2	**Display:** **PFV:** No	None

PROPRIETARY NOTICE: This document is copyright and the property of TRW Automotive Inc. It is disclosed in confidence. It may not be copied (in whole or in part), disclosed to others or used for manufacturing, without the prior written consent of TRW Automotive Inc.
© TRW Automotive Inc. 2006

5.15.4 Controlled System Shutdown Failure

DTC Code	Fault symptom	Condition for recog-nition	Reason for fault	Detection rules	Detection time	Latch type	System response	Driver notification -------- PFV (Yes/No)	Remarks
5104	00		***Keep Alive Voltage Regulator not functional - ECU looses complete power (battery voltage) - Processor is incorrectly reset***	**Controlled System Shutdown Failure** Two blocks in NVRAM are used to failsafe the system mode manager's ability to control the system shutdown process. During system initialization (each new ignition cycle), the contents of these two blocks are compared. If a mismatch is found, it indicates that mode manager was unable to control the system shutdown process on the previous ignition cycle.	Immediately	Ignition latched	EBD: R0 ABS: R0 TC: R0 YSC: R0 HBA: R0 EDTR: R0 BrakeAC:R0 HA: R0 ITPM:R0	**Display:** **PFV:** No	None

PROPRIETARY NOTICE: This document is copyright and the property of TRW Automotive Inc. It is disclosed in confidence. It may not be copied (in whole or in part), disclosed to others or used for manufacturing, without the prior written consent of TRW Automotive Inc.
© TRW Automotive Inc. 2006

5.15.5 Erroneous Valve Supply Voltage

DTC Code	Fault symptom	Condition for recog-nition	Reason for fault	Detection rules	Detection time	Latch type	System response	Driver notification -------- PFV (Yes/No)	Remarks
5106	04		***- Fuse break of the PIN KL30V*** ***- ECU Connector problem on Pin KL30V*** ***- Open circuit on PCB*** ***System ASIC fault***	*Fault Identifier:* VALVE_SUPPLY_ERROR The voltage KL30V is continously monitored (every 5ms). Is this voltage below 4,75V the fault counter will increment.Is again the voltage above 5,25V the fault counter will decrement. Fault Passing condition: Ignition on, continous Failsafing; BLS has not been pressed for at least 5 seconds.	100msec	Ignition latched	EBD: R2 ABS: R2 TC: R1 YSC: R2 HBA: R2 EDTR: R0 BrakeAC:R0 HA: R2 ITPM:R0	**Display:** **PFV:** No	None

PROPRIETARY NOTICE: This document is copyright and the property of TRW Automotive Inc. It is disclosed in confidence. It may not be copied (in whole or in part), disclosed to others or used for manufacturing, without the prior written consent of TRW Automotive Inc.
© TRW Automotive Inc. 2006

5.15.6 INVALID_STATE_R4(For Debug Only in ESC)

DTC Code	Fault symptom	Condition for recognition	Reason for fault	Detection rules	Detection time	Latch type	System response	Driver notification -------- PFV (Yes/No)	Remarks
FFFF	FF		***-RAM corruptions by software or environmental conditions causing bit flips.***	A fault is set if one of the state machines in the application code tries to transition to invalid state. This fault is only set if the application code is compiled with the "DEBUG" compiler option.	Immediately	Igniition latched	EBD: R0 ABS: R0 TC: R0 YSC: R0 HBA: R0 EDTR: R0 BrakeAC:R0 HA: R0 ITPM:R0	**Display:** **PFV:** No	None

PROPRIETARY NOTICE: This document is copyright and the property of TRW Automotive Inc. It is disclosed in confidence. It may not be copied (in whole or in part), disclosed to others or used for manufacturing, without the prior written consent of TRW Automotive Inc.
© TRW Automotive Inc. 2006

5.15.7 INVALID_STATE_M3(For Debug Only)

DTC Code	Fault symptom	Condition for recognition	Reason for fault	Detection rules	Detection time	Latch type	System response	Driver notification -------- PFV (Yes/No)	Remarks
FFFF	FF		***-RAM corruptions by software or environmental conditions causing bit flips.***	A fault is set if one of the state machines in the application code tries to transition to invalid state. This fault is only set if the application code is compiled with the "DEBUG" compiler option.	Immediately	Igniition latched	EBD: R0 ABS: R0 TC: R0 YSC: R0 HBA: R0 EDTR: R0 BrakeAC:R0 HA: R0 ITPM:R0	**Display:** **PFV:** No	None

PROPRIETARY NOTICE: This document is copyright and the property of TRW Automotive Inc. It is disclosed in confidence. It may not be copied (in whole or in part), disclosed to others or used for manufacturing, without the prior written consent of TRW Automotive Inc.
© TRW Automotive Inc. 2006

5.15.8 DIVIDE_BY_ZERO_FAULT_R4 (For Debug Only in ESC)

DTC Code	Fault symptom	Condition for recog-nition	Reason for fault	Detection rules	Detection time	Latch type	System response	Driver notification -------- PFV (Yes/No)	Remarks
FFFF	FF		***-Code Does Divide by Zero***	**Divide by Zero R4** Debug Only, Divide by zero in code.		Igniition latched	EBD: R0 ABS: R0 TC: R0 YSC: R0 HBA: R0 EDTR: R0 BrakeAC:R0 HA: R0 ITPM:R0	**Display:** **PFV:** No	None

PROPRIETARY NOTICE: This document is copyright and the property of TRW Automotive Inc. It is disclosed in confidence. It may not be copied (in whole or in part), disclosed to others or used for manufacturing, without the prior written consent of TRW Automotive Inc.
© TRW Automotive Inc. 2006

5.15.9 DIVIDE_BY_ZERO_FAULT_M3 (For Debug Only)

DTC Code	Fault symptom	Condition for recog-nition	Reason for fault	Detection rules	Detection time	Latch type	System response	Driver notification -------- PFV (Yes/No)	Remarks
FFFF	FF		***-Code Does Divide by Zero***	**Divide by Zero M3** Debug Only, Divide by zero in code.		Ignition latched	EBD: R0 ABS: R0 TC: R0 YSC: R0 HBA: R0 EDTR: R0 BrakeAC:R0 HA: R0 ITPM:R0	**Display:** **PFV:** No	None

PROPRIETARY NOTICE: This document is copyright and the property of TRW Automotive Inc. It is disclosed in confidence. It may not be copied (in whole or in part), disclosed to others or used for manufacturing, without the prior written consent of TRW Automotive Inc.
© TRW Automotive Inc. 2006

5.15.10 M3_MISSING_FAULT

DTC Code	Fault symptom	Condition for recog-nition	Reason for fault	Detection rules	Detection time	Latch type	System response	Driver notification -------- PFV (Yes/No)	Remarks
FFFF	FF		***- Incorrect SW configuration.***	Both cores of the µC use the same FmDB to ensure equal behavior. On the M3 core only a subset of the present Faultcodes is available in order to save RAM. This fault is set, if a subsystem on M3 uses a Faultcode that is present in the global FmDB but not in the M3 sub-set. This fault must not be detected during lifetime.	Immediately	Igniition latched	EBD: R2 ABS: R2 TC: R2 YSC: R2 HBA: R2 EDTR: R2 BrakeAC:R2 HA: R2 ITPM:R2	**Display:** **PFV:** No	None

PROPRIETARY NOTICE: This document is copyright and the property of TRW Automotive Inc. It is disclosed in confidence. It may not be copied (in whole or in part), disclosed to others or used for manufacturing, without the prior written consent of TRW Automotive Inc.
© TRW Automotive Inc. 2006

5.16 Switch Faults

5.16.1 Brake Switch Always Active

DTC Code	Fault symptom	Condition for recog-nition	Reason for fault	Detection rules	Detection time	Latch type	System response	Driver notification -------- PFV (Yes/No)	Remarks
4040	08	Power Mode RUN, Continuous Failsafing	***mechanical fault***	INHIBIT CONDITIONS: 1. Brake switch, MCP signal or vehicle speed not valid ENABLE CONDITIONS: 2. vehicle speed vx > 15 km/h (vehicle driving) and MCP < 6.2 bar for 2 minutes 3. additionally: accelerator position > 20 % and vehicle acceleration ax > 0.4 m/s² for 2 seconds FAULT DETECTION CONDITIONS: The fault is set if the brake light switch is always active (= 1) over a long period of time with low pressure sensor sig-nal	15 msec	Ignition latched	EBD: R0 ABS: R0 TC: R0 YSC: R0 HBA: R0 EDTR: R0 BrakeAC:R0 HA: R2 ITPM:R0	**Display:** **PFV:** Yes	None

5.16.2 Brake Switch Never Active

PROPRIETARY NOTICE: This document is copyright and the property of TRW Automotive Inc. It is disclosed in confidence. It may not be copied (in whole or in part), disclosed to others or used for manufacturing, without the prior written consent of TRW Automotive Inc.
© TRW Automotive Inc. 2006

DTC Code	Fault symptom	Condition for recog-nition	Reason for fault	Detection rules	Detection time	Latch type	System response	Driver notification -------- PFV (Yes/No)	Remarks
4040	08	Power Mode RUN, Continuous Failsafing	***Mechanical fault***	This function detects on "open" brake switch signal under the following conditions: INHIBIT CONDITIONS: 1. Brake switch or MCP signal not valid ENABLE CONDITIONS: 2. There is no MC pressure fault pending 3. HA and BOD are inactive FAULT DETCTION CONDITIONS: 4. The fault is set if: a. The brake switch is inactive b. Min and max MCP state has to be observed for 2 sec each c. The MCP sensor signal difference between max pressure and min pressure is greater than 15 bar	15 msec	Ignition latched	EBD: R0 ABS: R0 TC: R0 YSC: R0 HBA: R0 EDTR: R0 BrakeAC:R0 HA: R2 ITPM:R0	**Display:** **PFV:** Yes	None

PROPRIETARY NOTICE: This document is copyright and the property of TRW Automotive Inc. It is disclosed in confidence. It may not be copied (in whole or in part), disclosed to others or used for manufacturing, without the prior written consent of TRW Automotive Inc.
© TRW Automotive Inc. 2006

5.16.3 Driver Mode Switch Stuck ON (only for ESC) :

DTC Code	Fault symptom	Condition for recog-nition	Reason for fault	Detection rules	Detection time	Latch type	System response	Driver notification -------- ECE (Yes/No)	Remarks
4089	09	Power Mode RUN, Continuous Failsafing	***- Driver mode switch ohmic shorted*** ***- Driver mode switch mechani-cal blocked*** ***- Short ciruit at PCB*** ***- AD converter defektiv***	**Driver Mode Switch Stuck On :** The ESP (Driver Mode) switch is always closed: 1. ESP switch valid 2. closed more than 10 seconds	Immediately	Condition latched	EBD: R0 ABS: R0 TC: R0 YSC: R0 HBA: R0 EDTR: R0 BrakeAC:R0 HA: R0 ITPM:R0	**Display:** **PFV:** Yes	None

PROPRIETARY NOTICE: This document is copyright and the property of TRW Automotive Inc. It is disclosed in confidence. It may not be copied (in whole or in part), disclosed to others or used for manufacturing, without the prior written consent of TRW Automotive Inc.
© TRW Automotive Inc. 2006

5.16.4 Driver Mode Switch Invalid (only for ESC) :

DTC Code	Fault symptom	Condition for recog-nition	Reason for fault	Detection rules	Detection time	Latch type	System response	Driver notification -------- PFV (Yes/No)	Remarks
4089	09	Power Mode RUN, Continuous Failsafing	***Mechanical fault***	**Driver Mode Switch Invalid Fault:** The Driver Mode switch invalid fault is set , if the driver mode switch feedback voltage is in the range of 30 % to 80 % of the applied ignition voltage.	100 msecs	Condition latched	EBD: R0 ABS: R0 TC: R0 YSC: R0 HBA: R0 EDTR: R0 BrakeAC:R0 HA: R0 ITPM:R0	**Display:** **PFV:** Yes	None

PROPRIETARY NOTICE: This document is copyright and the property of TRW Automotive Inc. It is disclosed in confidence. It may not be copied (in whole or in part), disclosed to others or used for manufacturing, without the prior written consent of TRW Automotive Inc.
© TRW Automotive Inc. 2006

5.16.5 Reverse Switch Correlation Failure

DTC Code	Fault symptom	Condition for recog-nition	Reason for fault	Detection rules	Detection time	Latch type	System response	Driver notification -------- ECE (Yes/No)	Remarks
5102	00	Power Mode RUN, Continuous Failsafing	***Mechanical fault in sensor***	**Reverse Switch Correlation** The reverse gear switch has to match the driving direction. The detection is active, in case the vehicle speed exceeds 2.5 m/sec (clutch switch not engaged) and the wheel speeds, engine signals, Yaw Rate, Lat Acc, Long Acc are valid. Two types of implausible reverse gear switch states are detected: 1. The reverse gear switch is always open. If no hill was recognized (hill identification: vehicle standstill, Long Acc > 0.4 m/sec² for 0.5 sec), but reverse driving was detected, the fault will be latched after 3 minutes. 2. The reverse gear switch is always closed. The fault is latched if forward driving was detected for 5 seconds OR the vehicle speed is above 30 m/sec for 5 seconds. This fault is cleared when a change in the reverse switch state was detected.	Immediately	Ignition latched	EBD: R0 ABS: R0 TC: R0 YSC: R0 HBA: R0 EDTR: R0 BrakeAC:R0 HA: R2 ITPM:R0	**Display:** **PFV:** Yes	None

PROPRIETARY NOTICE: This document is copyright and the property of TRW Automotive Inc. It is disclosed in confidence. It may not be copied (in whole or in part), disclosed to others or used for manufacturing, without the prior written consent of TRW Automotive Inc.
© TRW Automotive Inc. 2006

5.16.6 Clutch Switch Correlation Failure:

DTC Code	Fault symptom	Condition for recog-nition	Reason for fault	Detection rules	Detection time	Latch type	System response	Driver notification -------- PFV (Yes/No)	Remarks
5102	00	Power Mode RUN, Continuous Failsafing	***Mechanical fault in sensor***	***Clutch Switch Correlation*** The clutch switch has to change states while shifting gears. Two types of implausible clutch switch states are detected: 1. The clutch switch is always open and valid. After 5 recognized gear shifts and at least 250 m driven distance, the fault is latched. 2. The clutch switch is always closed and valid. After 20 recognized gear shifts and at least 5000 m driven distance, the fault is latched. This fault is cleared when a change in the switch state was detected.	100 msecs	Condition latched	EBD: R0 ABS: R0 TC: R0 YSC: R0 HBA: R0 EDTR: R0 BrakeAC:R0 HA: R2 ITPM:R0	**Display:** **PFV:** Yes	None

PROPRIETARY NOTICE: This document is copyright and the property of TRW Automotive Inc. It is disclosed in confidence. It may not be copied (in whole or in part), disclosed to others or used for manufacturing, without the prior written consent of TRW Automotive Inc.
© TRW Automotive Inc. 2006

5.17 CAN Communication Faults

5.17.1 CAN Bus 0 Off

DTC Code	Fault symptom	Condition for recognition	Reason for fault	Detection rules	Detection time	Latch type	System response	Driver notification -------- PFV (Yes/No)	Remarks
C073	88	See the detection rules	***CAN controller raised bus off flag*** ***The transmit error counter of the CAN controller reaches the threshold off 255***	**CAN Bus 0 Off Fault:** . INHIBIT_CONDITIONS - Init time* is not passed after ignition ON. - Voltage is out of specified range. ENABLE_CONDITIONS - Init time* is passed after ignition ON. FAULT DETECTION CONDITIONS Bus Off condition detected continuously for 5 times, without successful transmission or reception of messages in the meantime. *Init time: ESC: 3000ms		Condition latched	EBD: R0 ABS: R0 TC: R2 YSC: R2 HBA: R0 EDTR: R2 Brake AC:R0 HA : R2 ITPM :R2	**Display:** **PFV:** No	None

PROPRIETARY NOTICE: This document is copyright and the property of TRW Automotive Inc. It is disclosed in confidence. It may not be copied (in whole or in part), disclosed to others or used for manufacturing, without the prior written consent of TRW Automotive Inc.
© TRW Automotive Inc. 2006

5.17.2 CAN Bus 0 Hardware INIT

DTC Code	Fault symptom	Condition for recog-nition	Reason for fault	Detection rules	Detection time	Latch type	System response	Driver notification -------- PFV (Yes/No)	Remarks
C073	88	Ignition On, Continuous Failsafe	***Hardware initiali-zation failed***	**CAN Bus 0 Hardware INIT Fault:** CAN hardware initialization timer becomes 0 before hard-ware initialization process was completed. Permanent loop in CAN driver has been aborted for 3 times -> CAN register could not be written -> CAN HW cannot be initialized	3x	Ignition latched	EBD: R0 ABS: R0 TC: R2 YSC: R2 HBA: R0 EDTR: R2 Brake AC:R0 HA : R2 ITPM :R2	**Display:** **PFV:** No	None

PROPRIETARY NOTICE: This document is copyright and the property of TRW Automotive Inc. It is disclosed in confidence. It may not be copied (in whole or in part), disclosed to others or used for manufacturing, without the prior written consent of TRW Automotive Inc.
© TRW Automotive Inc. 2006

5.17.3 CAN Bus 0 Mute / CAN Bus 0 Transmission Acknowledge

DTC Code	Fault symptom	Condition for recog-nition	Reason for fault	Detection rules	Detection time	Latch type	System response	Driver notification -------- PFV (Yes/No)	Remarks
C073	88	See the detection rules	***Open circuit of the CAN Bus CAN(H) CAN(L) No bus user's present***	**CAN_DEVICE_0_MUTE:** . INHIBIT_CONDITIONS - Init time* is not passed after ignition ON. - Voltage is out of specified range. ENABLE_CONDITIONS - Init time* is passed after ignition ON. FAULT DETECTION CONDITIONS The CAN Controller gets no Acknowledge from other CAN bus participants and receives no messages. The detection is only after a defined startup phase active. or Timeout of all receive-messages *Init time: ABS: 1000ms ESC: 3000ms	200msec	Condition latched	EBD: R0 ABS: R0 TC: R2 YSC: R2 HBA: R0 EDTR: R2 BrakeAC:R0 HA : R2 ITPM: R2	**Display:** **PFV:** No	None

PROPRIETARY NOTICE: This document is copyright and the property of TRW Automotive Inc. It is disclosed in confidence. It may not be copied (in whole or in part), disclosed to others or used for manufacturing, without the prior written consent of TRW Automotive Inc.
© TRW Automotive Inc. 2006

5.18 Messege Timeout failures

5.18.1 BCM HSC FRP00 CAN message timeout failure

DTC Code	Fault symptom	Condition for recog-nition	Reason for fault	Detection rules	Detection time	Latch type	System response	Driver notification -------- PFV (Yes/No)	Remarks
DA97	87	See detection rules	***Message not received for a certain time***	*SAIC_BCM_HSC_FRP00_MISSING* '- Init time* is passed after ignition ON. The ABS/ESC unit is monitoring all relevant CAN messages of other nodes. If any of the messages is missing for 5xCycleTimes ms then the corresponding timeout fault will be latched *Init time: ESC: 3000ms	x5CycleTimes	Condition latched	EBD: R0 ABS: R0 TC: R0 YSC: R0 HBA: R0 EDTR: R0 Brake AC:R0 HA : R2 ITPM :R0	**Display:** **PFV:** No	None

PROPRIETARY NOTICE: This document is copyright and the property of TRW Automotive Inc. It is disclosed in confidence. It may not be copied (in whole or in part), disclosed to others or used for manufacturing, without the prior written consent of TRW Automotive Inc.
© TRW Automotive Inc. 2006

5.18.2 BCM HSC FRP02 CAN message timeout failure

DTC Code	Fault symptom	Condition for recognition	Reason for fault	Detection rules	Detection time	Latch type	System response	Driver notification -------- PFV (Yes/No)	Remarks
DC00	87	See detection rules	***Message not received for a certain time***	*SAIC_BCM_HSC_FRP02_MISSING* '- Init time* is passed after ignition ON. The ABS/ESC unit is monitoring all relevant CAN messages of other nodes. If any of the messages is missing for 5xCycleTimes ms then the corresponding timeout fault will be latched *Init time: ESC: 3000ms	x5CycleTimes	Condition latched	EBD: R0 ABS: R0 TC: R0 YSC: R0 HBA: R0 EDTR: R0 Brake AC:R0 HA : R0 ITPM :R0	**Display:** **PFV:** No	None

5.18.3 BCM HSC FRP03 CAN message timeout failure

PROPRIETARY NOTICE: This document is copyright and the property of TRW Automotive Inc. It is disclosed in confidence. It may not be copied (in whole or in part), disclosed to others or used for manufacturing, without the prior written consent of TRW Automotive Inc.
© TRW Automotive Inc. 2006

DTC Code	Fault symptom	Condition for recog-nition	Reason for fault	Detection rules	Detection time	Latch type	System response	Driver notification -------- PFV (Yes/No)	Remarks
DBC2	87	See detection rules	***Message not received for a certain time***	*SAIC_BCM_HSC_FRP03_MISSING* - Init time* is passed after ignition ON. The ABS/ESC unit is monitoring all relevant CAN messages of other nodes. If any of the messages is missing for 5xCycleTimes ms then the corresponding timeout fault will be latched *Init time: ESC: 3000ms	x5CycleTimes	Condition latched	EBD: R0 ABS: R0 TC: R0 YSC: R0 HBA: R0 EDTR: R0 Brake AC:R0 HA : R2 ITPM :R0	**Display:** **PFV:** No	None

\

5.18.4 EMS HSC FRP00 CAN message timeout failure

PROPRIETARY NOTICE: This document is copyright and the property of TRW Automotive Inc. It is disclosed in confidence. It may not be copied (in whole or in part), disclosed to others or used for manufacturing, without the prior written consent of TRW Automotive Inc.
© TRW Automotive Inc. 2006

DTC Code	Fault symptom	Condition for recog-nition	Reason for fault	Detection rules	Detection time	Latch type	System response	Driver notification -------- PFV (Yes/No)	Remarks
D65E	87	See detection rules	***Message not received for a certain time***	*SAIC_EMS_HSC_FRP00_MISSING* - Init time* is passed after ignition ON. The ABS/ESC unit is monitoring all relevant CAN messages of other nodes. If any of the messages is missing for 5xCycleTimes ms then the corresponding timeout fault will be latched *Init time: ESC: 3000ms	x5CycleTimes	Condition latched	EBD: R0 ABS: R0 TC: R1 YSC: R2 HBA: R0 EDTR: R2 Brake AC:R0 HA : R2 ITPM :R2	**Display:** **PFV:** No	None

PROPRIETARY NOTICE: This document is copyright and the property of TRW Automotive Inc. It is disclosed in confidence. It may not be copied (in whole or in part), disclosed to others or used for manufacturing, without the prior written consent of TRW Automotive Inc.
© TRW Automotive Inc. 2006

5.18.5 EMS HSC FRP01 CAN message timeout failure

DTC Code	Fault symptom	Condition for recog-nition	Reason for fault	Detection rules	Detection time	Latch type	System response	Driver notification -------- PFV (Yes/No)	Remarks
DA6E	87	See detection rules	***Message not received for a certain time***	*SAIC_EMS_HSC_FRP01_MISSING* - Init time* is passed after ignition ON. The ABS/ESC unit is monitoring all relevant CAN messages of other nodes. If any of the messages is missing for 5xCycleTimes ms then the corresponding timeout fault will be latched *Init time: ESC: 3000ms	x5CycleTimes	Condition latched	EBD: R0 ABS: R0 TC: R1 YSC: R2 HBA: R0 EDTR: R2 Brake AC:R0 HA : R2 ITPM :R0	**Display:** **PFV:** No	None

PROPRIETARY NOTICE: This document is copyright and the property of TRW Automotive Inc. It is disclosed in confidence. It may not be copied (in whole or in part), disclosed to others or used for manufacturing, without the prior written consent of TRW Automotive Inc.
© TRW Automotive Inc. 2006

5.18.6 EMS HSC Fr P02 CAN message timeout failure

DTC Code	Fault symptom	Condition for recog-nition	Reason for fault	Detection rules	Detection time	Latch type	System response	Driver notification -------- PFV (Yes/No)	Remarks
DB7E	87	See detection rules	***Message not received for a certain time***	*SAIC_EMS_HSC_FRP02_MISSING* - Init time* is passed after ignition ON. The ABS/ESC unit is monitoring all relevant CAN messages of other nodes. If any of the messages is missing for 5xCycleTimes ms then the corresponding timeout fault will be latched *Init time: ESC: 3000ms	x5CycleTimes	Condition latched	EBD: R0 ABS: R0 TC: R0 YSC: R0 HBA: R0 EDTR: R0 Brake AC:R0 HA : R2 ITPM :R0	**Display:** **PFV:** No	None

PROPRIETARY NOTICE: This document is copyright and the property of TRW Automotive Inc. It is disclosed in confidence. It may not be copied (in whole or in part), disclosed to others or used for manufacturing, without the prior written consent of TRW Automotive Inc.
© TRW Automotive Inc. 2006

5.18.7 EMS HSC Fr P03 CAN message timeout failure

DTC Code	Fault symptom	Condition for recog-nition	Reason for fault	Detection rules	Detection time	Latch type	System response	Driver notification -------- PFV (Yes/No)	Remarks
D9E7	87	See detection rules	***Message not received for a certain time***	SAIC_EMS_HSC_FRP03_MISSING - Init time* is passed after ignition ON. The ABS/ESC unit is monitoring all relevant CAN messages of other nodes. If any of the messages is missing for 5xCycleTimes ms then the corresponding timeout fault will be latched. *Init time: ESC: 3000ms	x5CycleTimes	Condition latched	EBD: R0 ABS: R0 TC: R1 YSC: R2 HBA: R0 EDTR: R2 Brake AC:R0 HA : R2 ITPM :R0	**Display:** **PFV:** No	None

PROPRIETARY NOTICE: This document is copyright and the property of TRW Automotive Inc. It is disclosed in confidence. It may not be copied (in whole or in part), disclosed to others or used for manufacturing, without the prior written consent of TRW Automotive Inc.
© TRW Automotive Inc. 2006

5.18.8 EMS HSC Fr P05 CAN message timeout failure

DTC Code	Fault symptom	Condition for recognition	Reason for fault	Detection rules	Detection time	Latch type	System response	Driver notification -------- PFV (Yes/No)	Remarks
DC08	87	See detection rules	***Message not received for a certain time***	SAIC_EMS_HSC_FRP05_MISSING - Init time* is passed after ignition ON. The ABS/ESC unit is monitoring all relevant CAN messages of other nodes. If any of the messages is missing for 5xCycleTimes ms then the corresponding timeout fault will be latched. *Init time: ESC: 3000ms	x5CycleTimes	Condition latched	EBD: R0 ABS: R0 TC: R0 YSC: R0 HBA: R0 EDTR: R0 Brake AC:R0 HA : R2 ITPM :R0	**Display:** **PFV:** No	None

PROPRIETARY NOTICE: This document is copyright and the property of TRW Automotive Inc. It is disclosed in confidence. It may not be copied (in whole or in part), disclosed to others or used for manufacturing, without the prior written consent of TRW Automotive Inc.
© TRW Automotive Inc. 2006

5.18.9 AMT HSC Fr P01 CAN message timeout failure

DTC Code	Fault symptom	Condition for recog-nition	Reason for fault	Detection rules	Detection time	Latch type	System response	Driver notification -------- PFV (Yes/No)	Remarks
D6BC	87	See detection rules	***Message not received for a certain time***	SAIC_AMT_HSC_FRP01_MISSING - Init time* is passed after ignition ON. The ABS/ESC unit is monitoring all relevant CAN messages of other nodes. If any of the messages is missing for 5xCycleTimes ms then the corresponding timeout fault will be latched. *Init time: ESC: 3000ms	x5CycleTimes	Condition latched	EBD: R0 ABS: R0 TC: R0 YSC: R0 HBA: R0 EDTR: R0 Brake AC:R0 HA : R2 ITPM :R0	**Display:** **PFV:** No	None

PROPRIETARY NOTICE: This document is copyright and the property of TRW Automotive Inc. It is disclosed in confidence. It may not be copied (in whole or in part), disclosed to others or used for manufacturing, without the prior written consent of TRW Automotive Inc.
© TRW Automotive Inc. 2006

5.18.10 IMU HSC Fr P00 CAN message timeout failure

DTC Code	Fault symptom	Condition for recog-nition	Reason for fault	Detection rules	Detection time	Latch type	System response	Driver notification -------- PFV (Yes/No)	Remarks
FFFF	FF	See detection rules	***Message not received for a certain time***	SAIC_IMU_HSC_FRP00_MISSING - Init time* is passed after ignition ON. The ABS/ESC unit is monitoring all relevant CAN messages of other nodes. If any of the messages is missing for 5xCycleTimes ms then the corresponding timeout fault will be latched. *Init time: ESC: 3000ms	x5CycleTimes	Condition latched	EBD: R0 ABS: R0 TC: R0 YSC: R2 HBA: R0 EDTR: R0 Brake AC:R0 HA : R2 ITPM :R2	**Display:** **PFV:** No	None

PROPRIETARY NOTICE: This document is copyright and the property of TRW Automotive Inc. It is disclosed in confidence. It may not be copied (in whole or in part), disclosed to others or used for manufacturing, without the prior written consent of TRW Automotive Inc.
© TRW Automotive Inc. 2006

5.18.11 IMU HSC Fr P01 CAN message timeout failure

DTC Code	Fault symptom	Condition for recog-nition	Reason for fault	Detection rules	Detection time	Latch type	System response	Driver notification -------- PFV (Yes/No)	Remarks
FFFF	FF	See detection rules	***Message not received for a certain time***	SAIC_IMU_HSC_FRP01_MISSING - Init time* is passed after ignition ON. The ABS/ESC unit is monitoring all relevant CAN messages of other nodes. If any of the messages is missing for 5xCycleTimes ms then the corresponding timeout fault will be latched. *Init time: ESC: 3000ms	x5CycleTimes	Condition latched	EBD: R0 ABS: R0 TC: R0 YSC: R2 HBA: R0 EDTR: R0 Brake AC:R0 HA : R2 ITPM :R2	**Display:** **PFV:** No	None

PROPRIETARY NOTICE: This document is copyright and the property of TRW Automotive Inc. It is disclosed in confidence. It may not be copied (in whole or in part), disclosed to others or used for manufacturing, without the prior written consent of TRW Automotive Inc.
© TRW Automotive Inc. 2006

5.18.12 IPK HSC Fr P00 CAN message timeout failure

DTC Code	Fault symptom	Condition for recog-nition	Reason for fault	Detection rules	Detection time	Latch type	System response	Driver notification -------- PFV (Yes/No)	Remarks
DA9D	87	See detection rules	***Message not received for a certain time***	*SAIC_IPK_HSC_FRP00_MISSING* - Init time* is passed after ignition ON. The ABS/ESC unit is monitoring all relevant CAN messages of other nodes. If any of the messages is missing for 5xCycleTimes ms then the corresponding timeout fault will be latched *Init time: ESC: 3000ms	x5CycleTimes	Condition latched	EBD: R0 ABS: R0 TC: R0 YSC: R0 HBA: R0 EDTR: R0 Brake AC:R0 HA : R2 ITPM :R2	**Display:** **PFV:** No	None

PROPRIETARY NOTICE: This document is copyright and the property of TRW Automotive Inc. It is disclosed in confidence. It may not be copied (in whole or in part), disclosed to others or used for manufacturing, without the prior written consent of TRW Automotive Inc.
© TRW Automotive Inc. 2006

5.18.13 IPK HSC Fr P01 CAN message timeout failure

DTC Code	Fault symptom	Condition for recog-nition	Reason for fault	Detection rules	Detection time	Latch type	System response	Driver notification -------- PFV (Yes/No)	Remarks
DBEE	87	See detection rules	***Message not received for a certain time***	*SAIC_IPK_HSC_FRP01_MISSING* - Init time* is passed after ignition ON. The ABS/ESC unit is monitoring all relevant CAN messages of other nodes. If any of the messages is missing for 5xCycleTimes ms then the corresponding timeout fault will be latched *Init time: ESC: 3000ms	x5CycleTimes	Condition latched	EBD: R0 ABS: R0 TC: R0 YSC: R0 HBA: R0 EDTR: R0 Brake AC:R0 HA : R2 ITPM :R2	**Display:** **PFV:** No	None

PROPRIETARY NOTICE: This document is copyright and the property of TRW Automotive Inc. It is disclosed in confidence. It may not be copied (in whole or in part), disclosed to others or used for manufacturing, without the prior written consent of TRW Automotive Inc.
© TRW Automotive Inc. 2006

5.18.14 IPK HSC Fr P05 CAN message timeout failure

DTC Code	Fault symptom	Condition for recog-nition	Reason for fault	Detection rules	Detection time	Latch type	System response	Driver notification -------- PFV (Yes/No)	Remarks
DC0F	87	See detection rules	***Message not received for a certain time***	*SAIC_IPK_HSC_FRP05_MISSING* - Init time* is passed after ignition ON. The ABS/ESC unit is monitoring all relevant CAN messages of other nodes. If any of the messages is missing for 5xCycleTimes ms then the corresponding timeout fault will be latched *Init time: ESC: 3000ms	x5CycleTimes	Condition latched	EBD: R0 ABS: R0 TC: R0 YSC: R0 HBA: R0 EDTR: R0 Brake AC:R0 HA : R2 ITPM :R2	**Display:** **PFV:** No	None

PROPRIETARY NOTICE: This document is copyright and the property of TRW Automotive Inc. It is disclosed in confidence. It may not be copied (in whole or in part), disclosed to others or used for manufacturing, without the prior written consent of TRW Automotive Inc.
© TRW Automotive Inc. 2006

5.18.15 SAS HSC Fr P00 CAN message timeout failure

DTC Code	Fault symptom	Condition for recog-nition	Reason for fault	Detection rules	Detection time	Latch type	System response	Driver notification -------- PFV (Yes/No)	Remarks
DACD	87	See detection rules	***Message not received for a certain time***	*SAIC_SAS_HSC_FRP00_MISSING* - Init time* is passed after ignition ON. The ABS/ESC unit is monitoring all relevant CAN messages of other nodes. If any of the messages is missing for 5xCycleTimes ms then the corresponding timeout fault will be latched *Init time: ESC: 3000ms	x5CycleTimes	Condition latched	EBD: R0 ABS: R0 TC: R0 YSC: R2 HBA: R0 EDTR: R0 Brake AC:R0 HA : R2 ITPM :R2	**Display:** **PFV:** No	None

PROPRIETARY NOTICE: This document is copyright and the property of TRW Automotive Inc. It is disclosed in confidence. It may not be copied (in whole or in part), disclosed to others or used for manufacturing, without the prior written consent of TRW Automotive Inc.
© TRW Automotive Inc. 2006

5.18.16 TCU HSC Fr P00 CAN message timeout failure

DTC Code	Fault symptom	Condition for recog-nition	Reason for fault	Detection rules	Detection time	Latch type	System response	Driver notification -------- PFV (Yes/No)	Remarks
D9BB	87	See detection rules	Message not received for a certain time	*SAIC_TCU_HSC_FRP00_MISSING* - Init time* is passed after ignition ON. The ABS/ESC unit is monitoring all relevant CAN messages of other nodes. If any of the messages is missing for 5xCycleTimes ms then the corresponding timeout fault will be latched *Init time: ESC: 3000ms	x5CycleTimes	Condition latched	EBD: R0 ABS: R0 TC: R0 YSC: R0 HBA: R0 EDTR: R0 Brake AC:R0 HA : R2 ITPM :R0	**Display:** **PFV:** No	None

PROPRIETARY NOTICE: This document is copyright and the property of TRW Automotive Inc. It is disclosed in confidence. It may not be copied (in whole or in part), disclosed to others or used for manufacturing, without the prior written consent of TRW Automotive Inc.
© TRW Automotive Inc. 2006

5.19 Invalid Data on the CAN bus Faults

5.19.1 Invalid Engine speed received on CAN

DTC Code	Fault symptom	Condition for recog-nition	Reason for fault	Detection rules	Detection time	Latch type	System response	Driver notification -------- PFV (Yes/No)	Remarks
C401	81	See detection rules	***A single Signal or Signals from the EMS are invalid.***	**Engine Data Invalid Fault:** The ESP is monitoring all relevant signals of the EMS and check if the signals were not valid for at least three times. If there is an invalid signal the fault occurance counter will be incremented by 1 counts at every occurance. The Invalid fault is set if the fault occurance counter reaches 3 counts.If no invalid signal received, the fault occurance counter is decremented by 1 count at every occurance. **Invalid Signal values:** EMS_IndicatedDriverReqTorq : *0xFFFF* EMS_FrictionalTorq : *0xFFFF* EMS_IndicatedRealEngTorq : 0xFFFF EMS_BrakePedalStatus : 0x3 EMS_EngineSpeed : 0xFFFF EMS_AccPedal : 0xFF EMS_EngineCoolanTemperature : 0xFF EMS_TotalOdometer : 0xFFFFFF EMS_MaxIndicatedTorq :0xFF EMS_MinIndicatedTorq: 0xFF EMS_TorqueConstant:0xFF EMS_IntakeManifoldPressure:0xFF EMS_IntakeManifoldPressureValid :0x01 EMS_AltitudeFactor: 0xFF EMS_ClutchPedalStatus:0x3 Failure Setting conditions: - no under Voltage failure is latched - no CAN Bus Off failure is latched - relevant CAN Message from EMS must be received Start up Time finished	x3 times	Ignition latched	EBD: R0 ABS: R0 TC: R1 YSC: R2 HBA: R0 EDTR: R2 Brake AC:R0 HA : R2 ITPM :R0	**Display:** **PFV:** No	None

PROPRIETARY NOTICE: This document is copyright and the property of TRW Automotive Inc. It is disclosed in confidence. It may not be copied (in whole or in part), disclosed to others or used for manufacturing, without the prior written consent of TRW Automotive Inc.
© TRW Automotive Inc. 2006

5.19.2 Invalid Engine Torque received on CAN

DTC Code	Fault symptom	Condition for recog-nition	Reason for fault	Detection rules	Detection time	Latch type	System response	Driver notification -------- PFV (Yes/No)	Remarks
C401	81	See detection rules	A single Signal or Signals from the EMS are invalid. On Signals with Alive counter, the counter signal is not incremented. On Signals with checksum, the checksum is cor-rupted.	**Engine Data Invalid Fault:** The ESP is monitoring all relevant signals of the EMS and check if the signals were not valid for at least three times. If there is an invalid signal the fault occurance counter will be incremented by 1 counts at every occurance. The Inva-lid fault is set if the fault occurance counter reaches 3 counts.If no invalid signal received, the fault occurance counter is decremented by 1 count at every occurance. **Invalid Signal values:** EMS_RollingCounter_ID265 Failure Setting conditions: - no under Voltage failure is latched - no CAN Bus Off failure is latched - relevant CAN Message from EMS must be re-ceived Start up Time finished	x3 times	Ignition latched	EBD: R0 ABS: R0 TC: R1 YSC: R2 HBA: R0 EDTR: R2 Brake AC:R0 HA : R2 ITPM :R2	**Display:** **PFV:** No	None

PROPRIETARY NOTICE: This document is copyright and the property of TRW Automotive Inc. It is disclosed in confidence. It may not be copied (in whole or in part), disclosed to others or used for manufacturing, without the prior written consent of TRW Automotive Inc.
© TRW Automotive Inc. 2006

5.19.3 Invalid accel pedal postion received on CAN

DTC Code	Fault symptom	Condition for recog-nition	Reason for fault	Detection rules	Detection time	Latch type	System response	Driver notification -------- PFV (Yes/No)	Remarks
C401	81	See detection rules	A single Signal or Signals from the EMS are invalid. On Signals with Alive counter, the counter signal is not incremented. On Signals with checksum, the checksum is cor-rupted.	COMMS_ACCEL_PEDAL_POSITION_INVALID - Init time* is passed after ignition ON. Invalid accel pedal position value received on CAN *Init time: ESC: 3000ms	x3 times	Ignition latched	EBD: R0 ABS: R0 TC: R1 YSC: R2 HBA: R0 EDTR: R2 Brake AC:R0 HA : R2 ITPM :R0	**Display:** **PFV:** No	None

PROPRIETARY NOTICE: This document is copyright and the property of TRW Automotive Inc. It is disclosed in confidence. It may not be copied (in whole or in part), disclosed to others or used for manufacturing, without the prior written consent of TRW Automotive Inc.
© TRW Automotive Inc. 2006

5.19.4 Invalid actual gear postion received on CAN

DTC Code	Fault symptom	Condition for recog-nition	Reason for fault	Detection rules	Detection time	Latch type	System response	Driver notification -------- PFV (Yes/No)	Remarks
C402	81	See detection rules	A single Signal or Signals from the TCM are invalid.	COMMS_ACTUAL_GEAR_POS_INVALID - Init time* is passed after ignition ON. Invalid accel pedal position value received on CAN *Init time: ESC: 3000ms	x3 times	Ignition latched	EBD: R0 ABS: R0 TC: R0 YSC: R0 HBA: R0 EDTR: R0 Brake AC:R0 HA : R2 ITPM :R0	**Display:** **PFV:** No	None

PROPRIETARY NOTICE: This document is copyright and the property of TRW Automotive Inc. It is disclosed in confidence. It may not be copied (in whole or in part), disclosed to others or used for manufacturing, without the prior written consent of TRW Automotive Inc.
© TRW Automotive Inc. 2006

5.19.5 Invalid target gear postion received on CAN

DTC Code	Fault symptom	Condition for recog-nition	Reason for fault	Detection rules	Detection time	Latch type	System response	Driver notification -------- PFV (Yes/No)	Remarks
C402	81	See detection rules	A single Signal or Signals from the TCM are invalid.	COMMS_TARGET_GEAR_POS_INVALID - Init time* is passed after ignition ON. Invalid target gear position value received on CAN *Init time: ESC: 3000ms	x3 times	Ignition latched	EBD: R0 ABS: R0 TC: R0 YSC: R0 HBA: R0 EDTR: R0 Brake AC:R0 HA : R2 ITPM :R0	**Display:** **PFV:** No	None

PROPRIETARY NOTICE: This document is copyright and the property of TRW Automotive Inc. It is disclosed in confidence. It may not be copied (in whole or in part), disclosed to others or used for manufacturing, without the prior written consent of TRW Automotive Inc.
© TRW Automotive Inc. 2006

5.19.6 Invalid engine coolant temperature received on CAN

DTC Code	Fault symptom	Condition for recog-nition	Reason for fault	Detection rules	Detection time	Latch type	System response	Driver notification -------- PFV (Yes/No)	Remarks
C401	81	See detection rules	A single Signal or Signals from the EMS are invalid. On Signals with Alive counter, the counter signal is not incremented. On Signals with checksum, the checksum is cor-rupted.	- COMMS_ENGINE_COOL_TEMP_INVALID - Init time* is passed after ignition ON. The Engine cool temp invalid signal provided by EMS is invalid for longer than the specified timeout time. *Init time: ESC: 3000ms	x3 times	Ignition latched	EBD: R0 ABS: R0 TC: R1 YSC: R2 HBA: R0 EDTR: R2 Brake AC:R0 HA : R2 ITPM :R0	**Display:** **PFV:** No	None

PROPRIETARY NOTICE: This document is copyright and the property of TRW Automotive Inc. It is disclosed in confidence. It may not be copied (in whole or in part), disclosed to others or used for manufacturing, without the prior written consent of TRW Automotive Inc.
© TRW Automotive Inc. 2006

5.19.7 Sas voltage error

DTC Code	Fault symptom	Condition for recog-nition	Reason for fault	Detection rules	Detection time	Latch type	System response	Driver notification -------- PFV (Yes/No)	Remarks
C428	81	Ignition on,Continuous Failsafe	The steering angle voltage and/or its validation signal, provideded by the SC, is invalid for longer than the specified timeout time	The steering angle voltage and/or its validation signal, provided by the SC, is invalid for longer than the specified timeout time.	x3 times	Ignition latched	EBD: R0 ABS: R0 TC: R0 YSC: R2 HBA: R0 EDTR: R0 Brake AC:R0 HA : R2 ITPM :R2	**Display:** **PFV:** No	None

PROPRIETARY NOTICE: This document is copyright and the property of TRW Automotive Inc. It is disclosed in confidence. It may not be copied (in whole or in part), disclosed to others or used for manufacturing, without the prior written consent of TRW Automotive Inc.
© TRW Automotive Inc. 2006

5.19.8 Invalid steering Angle received on CAN

DTC Code	Fault symptom	Condition for recog-nition	Reason for fault	Detection rules	Detection time	Latch type	System response	Driver notification -------- PFV (Yes/No)	Remarks
C428	81	Ignition on,Continuous Failsafe	The steering angle signal and/or its validation signal, provided by the SC, is invalid for longer than the specified timeout time.	- COMMS_STEERING_ANGLE_INVALID The steering angle signal and/or its validation signal, pro-videded by the SC, is invalid for longer than the specified timeout time.	x3 times	Ignition latched	EBD: R0 ABS: R0 TC: R0 YSC: R2 HBA: R0 EDTR: R0 Brake AC:R0 HA : R2 ITPM :R2	**Display:** **PFV:** No	None

PROPRIETARY NOTICE: This document is copyright and the property of TRW Automotive Inc. It is disclosed in confidence. It may not be copied (in whole or in part), disclosed to others or used for manufacturing, without the prior written consent of TRW Automotive Inc.
© TRW Automotive Inc. 2006

5.19.9 SAS not Calibrated

DTC Code	Fault symptom	Condition for recog-nition	Reason for fault	Detection rules	Detection time	Latch type	System response	Driver notification -------- PFV (Yes/No)	Remarks
C428	81	Ignition on,Continuous Failsafe	Sensor not yet calibrated	COMMS_SAS_NOT_CALIBRATED Sensor not yet calibrated	x5 TImes	Condition latched	EBD: R0 ABS: R0 TC: R0 YSC: R2 HBA: R0 EDTR: R0 Brake AC:R0 HA : R2 ITPM :R2	**Display:** **PFV:** No	None

PROPRIETARY NOTICE: This document is copyright and the property of TRW Automotive Inc. It is disclosed in confidence. It may not be copied (in whole or in part), disclosed to others or used for manufacturing, without the prior written consent of TRW Automotive Inc.
© TRW Automotive Inc. 2006

5.19.10 Invalid SAS alive counter

DTC Code	Fault symptom	Condition for recog-nition	Reason for fault	Detection rules	Detection time	Latch type	System response	Driver notification -------- PFV (Yes/No)	Remarks
DACD	82	Ignition on,Continuous Failsafe	Alive counter stands still	COMMS_SAS_MSG_ALIVE_COUNTER_INVALID This fault is set if the alive counter of this particular message stands still for three times.	x3 times	Ignition latched	EBD: R0 ABS: R0 TC: R0 YSC: R2 HBA: R0 EDTR: R0 Brake AC:R0 HA : R2 ITPM :R2	**Display:** **PFV:** No	None

PROPRIETARY NOTICE: This document is copyright and the property of TRW Automotive Inc. It is disclosed in confidence. It may not be copied (in whole or in part), disclosed to others or used for manufacturing, without the prior written consent of TRW Automotive Inc.
© TRW Automotive Inc. 2006

5.19.11 Invalid Yaw rate data

DTC Code	Fault symptom	Condition for recog-nition	Reason for fault	Detection rules	Detection time	Latch type	System response	Driver notification -------- PFV (Yes/No)	Remarks
C513	81	Ignition on,Continuous Failsafe	Message not correct	COMMS_YAW_RATE_INVALID Either the data length of this particular message was shorter than specified or the received checksum calculation signal has a different value than expected.	x3 Times	Ignition latched	EBD: R0 ABS: R0 TC: R0 YSC: R2 HBA: R0 EDTR: R0 Brake AC:R0 HA : R2 ITPM :R2	**Display:** **PFV:** No	None

PROPRIETARY NOTICE: This document is copyright and the property of TRW Automotive Inc. It is disclosed in confidence. It may not be copied (in whole or in part), disclosed to others or used for manufacturing, without the prior written consent of TRW Automotive Inc.
© TRW Automotive Inc. 2006

5.19.12 Invalid SAS checksum

DTC Code	Fault symptom	Condition for recognition	Reason for fault	Detection rules	Detection time	Latch type	System response	Driver notification -------- PFV (Yes/No)	Remarks
DACD	83	Ignition on,Continuous Failsafe	Message not correct	COMMS_SAS_CHECKSUM_INVALID Either the data length of this particular message was shorter than specified or the received checksum calculation signal has a different value than expected for at least three times. If there is a shorter DLC or an invalid checksum received, the fault occurrence counter will be incremented by 100 counts at every reception date. A message invalid fault is set if the fault occurrence counter reaches 300 counts. If a correct message is received, the fault occurrence counter is decremented by 5 counts at every reception date. If one of the detection inhibitors is active, the fault occurrence counter is cleared. If there is a diagnostic clear dtc received, the fault occurrence counter gets also resetted.	x3 Times	Ignition latched	EBD: R0 ABS: R0 TC: R0 YSC: R2 HBA: R0 EDTR: R0 Brake AC:R0 HA : R2 ITPM :R2	**Display:** **PFV:** No	None

PROPRIETARY NOTICE: This document is copyright and the property of TRW Automotive Inc. It is disclosed in confidence. It may not be copied (in whole or in part), disclosed to others or used for manufacturing, without the prior written consent of TRW Automotive Inc.
© TRW Automotive Inc. 2006

5.19.13 Invalid Long accel data

DTC Code	Fault symptom	Condition for recog-nition	Reason for fault	Detection rules	Detection time	Latch type	System response	Driver notification -------- PFV (Yes/No)	Remarks
C432	81	Ignition on,Continuous Failsafe	The longitudinal accelearation sig-nal and/or its validation sig-nal, provided by the SC, is invalid for longer than the specified timeout time.	COMMS_LONG_ACCEL_INVALID The longitudinal accelearation signal and/or its validation sig-nal, provided by the SC, is invalid for longer than the specified timeout time.	x3 Times	Ignition latched	EBD: R0 ABS: R0 TC: R0 YSC: R0 HBA: R0 EDTR: R0 Brake AC:R0 HA : R2 ITPM :R2	**Display:** **PFV:** No	None

PROPRIETARY NOTICE: This document is copyright and the property of TRW Automotive Inc. It is disclosed in confidence. It may not be copied (in whole or in part), disclosed to others or used for manufacturing, without the prior written consent of TRW Automotive Inc.
© TRW Automotive Inc. 2006

5.19.14 Invalid Lat accel data

DTC Code	Fault symptom	Condition for recognition	Reason for fault	Detection rules	Detection time	Latch type	System response	Driver notification -------- PFV (Yes/No)	Remarks
C536	81	Ignition on,Continuous Failsafe	The Lateral acceleration signal and/or its validation signal, provided by the SC, is invalid for longer than the specified timeout time.	COMMS_LAT_ACCEL_INVALID The Lateral accelearation signal and/or its validation signal, provided by the SC, is invalid for longer than the specified timeout time.	x3 Times	Ignition latched	EBD: R0 ABS: R0 TC: R0 YSC: R2 HBA: R0 EDTR: R0 Brake AC:R0 HA : R2 ITPM :R2	**Display:** **PFV:** No	None

PROPRIETARY NOTICE: This document is copyright and the property of TRW Automotive Inc. It is disclosed in confidence. It may not be copied (in whole or in part), disclosed to others or used for manufacturing, without the prior written consent of TRW Automotive Inc.
© TRW Automotive Inc. 2006

5.19.15 Invalid IMU Yaw message alive counter

DTC Code	Fault symptom	Condition for recognition	Reason for fault	Detection rules	Detection time	Latch type	System response	Driver notification -------- PFV (Yes/No)	Remarks
FFFF	FF	Ignition on,Continuous Failsafe	Alive Counter stands still	COMMS_YAW_LAT_MSG_ALIVE_COUNTER_INVALID This fault is set if the alive counter of this particular message stands still for three times	x3 Times	Ignition latched	EBD: R0 ABS: R0 TC: R0 YSC: R2 HBA: R0 EDTR: R0 Brake AC:R0 HA : R2 ITPM :R2	**Display:** **PFV:** No	None

PROPRIETARY NOTICE: This document is copyright and the property of TRW Automotive Inc. It is disclosed in confidence. It may not be copied (in whole or in part), disclosed to others or used for manufacturing, without the prior written consent of TRW Automotive Inc.
© TRW Automotive Inc. 2006

5.19.16 Invalid IMU Long message alive counter

DTC Code	Fault symptom	Condition for recognition	Reason for fault	Detection rules	Detection time	Latch type	System response	Driver notification -------- PFV (Yes/No)	Remarks
FFFF	FF	Ignition on,Continuous Failsafe	Alive Counter stands still	COMMS_LONG_ACC_MSG_ALIVE_COUNTER_INVALID This fault is set if the alive counter of this particular message stands still for three times	x3times	Ignition latched	EBD: R0 ABS: R0 TC: R0 YSC: R0 HBA: R0 EDTR: R0 Brake AC:R0 HA : R2 ITPM :R2	**Display:** **PFV:** No	None

PROPRIETARY NOTICE: This document is copyright and the property of TRW Automotive Inc. It is disclosed in confidence. It may not be copied (in whole or in part), disclosed to others or used for manufacturing, without the prior written consent of TRW Automotive Inc.
© TRW Automotive Inc. 2006

5.20 EHB FAILURES (Applicable for only ESC)

5.20.1 BHM-APC learned offset value is excessive out of range (only for ESC)

DTC Code	Fault symptom	Condition for recog-nition	Reason for fault	Detection rules	Detection time	Latch type	System response	Driver notification -------- PFV (Yes/No)	Remarks
524B	00		***Tolerances of the unit too large***	**BHM-APC learned offset value is excessive out of range Fault:** The calibration routine tries too often to learn outside the MIN or MAX threshold. ***BHM_APC_FS_EXC_OFFS_LEARN***	Long term monitoring	Ignition latched	EBD: R0 ABS: R0 TC: R0 YSC: R0 HBA: R0 EDTR: R0 Brake AC:R0 HA : R0 ITPM :R0	**Display:** **PFV:** No	None

PROPRIETARY NOTICE: This document is copyright and the property of TRW Automotive Inc. It is disclosed in confidence. It may not be copied (in whole or in part), disclosed to others or used for manufacturing, without the prior written consent of TRW Automotive Inc.
© TRW Automotive Inc. 2006

5.20.2 BHM-APC has detected a defect pump, TC-Iso or TC-Supply (only for ESC)

DTC Code	Fault symptom	Condition for recognition	Reason for fault	Detection rules	Detection time	Latch type	System response	Driver notification -------- PFV (Yes/No)	Remarks
524B	00		***No pressure apply detected. Possible reasons: Air in hydraulic system, pump, TC-ISO or TC-supply defect First instance for repair work shop - check active pressure apply, bleed brake circuits, -- last instance - replace EHCU***	**BHM-APC has detected a defect pump, TC-Iso or TC-Supply Fault:** If no pressure is detected, a additional check will start which raise the TCIso offset current in large steps. If after this action no pressure detected the fault will set.. ***BHM_APC_FS_HYDR***	Long term monitoring	Ignition latched	EBD: R0 ABS: R0 TC: R2 YSC: R2 HBA: R2 EDTR: R0 Brake AC:R0 HA : R2 ITPM :R0	**Display:** **PFV:** No	None

PROPRIETARY NOTICE: This document is copyright and the property of TRW Automotive Inc. It is disclosed in confidence. It may not be copied (in whole or in part), disclosed to others or used for manufacturing, without the prior written consent of TRW Automotive Inc.
© TRW Automotive Inc. 2006

5.20.3 Exc. No. of failed learning attempts by too less rpm of pump (only for ESC)

DTC Code	Fault symptom	Condition for recog-nition	Reason for fault	Detection rules	Detection time	Latch type	System response	Driver notification -------- PFV (Yes/No)	Remarks
524C	00		***Defective pump motor or hydrau-lic pump***	**Exc. No. of failed learning attempts by too less rpm of pump Fault:** If the calibration sequence is too often interrupted by too low pump motor speed, the fault will set. ***BHM_APC_FS_ENV_PUMP***	Long term monitoring	Ignition latched	EBD: R0 ABS: R0 TC: R0 YSC: R0 HBA: R0 EDTR: R0 Brake AC:R0 HA : R0 ITPM :R0	**Display:** **PFV:** No	None

PROPRIETARY NOTICE: This document is copyright and the property of TRW Automotive Inc. It is disclosed in confidence. It may not be copied (in whole or in part), disclosed to others or used for manufacturing, without the prior written consent of TRW Automotive Inc.
© TRW Automotive Inc. 2006

5.20.4 Exc. No. of failed learning attempts by input signal quality (only for ESC)

DTC Code	Fault symptom	Condition for recog-nition	Reason for fault	Detection rules	Detection time	Latch type	System response	Driver notification -------- PFV (Yes/No)	Remarks
524C	00		***Electrical fault of the pump motor, many times "pop off" of TCIso valve***	**Exc. No. of failed learning attempts by input signal quality Fault:** If the calibration sequence is too often interrupted by too low pump motor speed, the fault will set. ***BHM_APC_FS_ENV_STABILITY***	Long term monitoring	Ignition latched	EBD: R0 ABS: R0 TC: R0 YSC: R0 HBA: R0 EDTR: R0 Brake AC:R0 HA : R0 ITPM :R0	**Display:** **PFV:** No	None

PROPRIETARY NOTICE: This document is copyright and the property of TRW Automotive Inc. It is disclosed in confidence. It may not be copied (in whole or in part), disclosed to others or used for manufacturing, without the prior written consent of TRW Automotive Inc.
© TRW Automotive Inc. 2006